FINEST QUALITY

Union Special®

LEWIS • COLUMBIA

INDUSTRIAL SEWING MACHINES

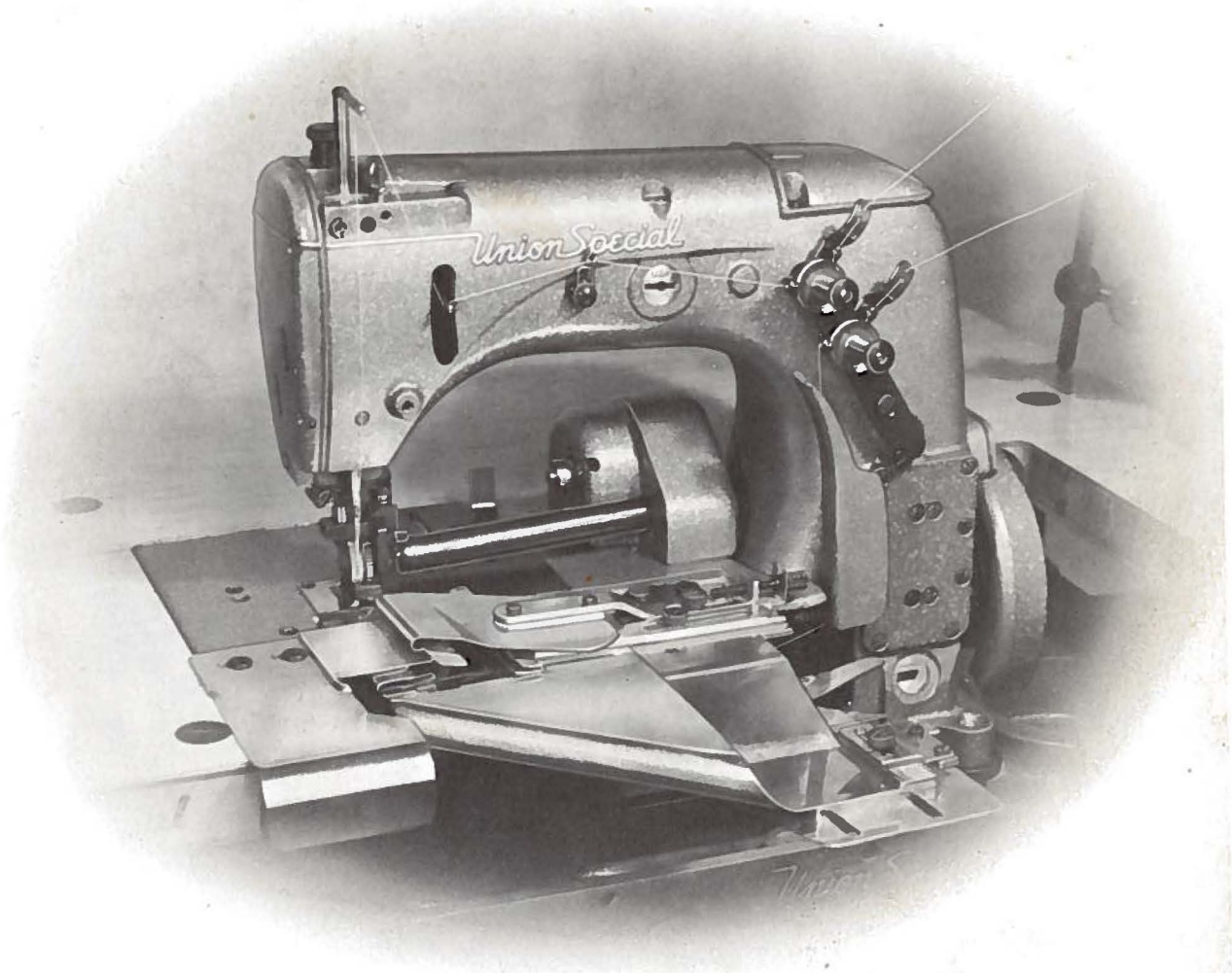

STYLES

53100A
53100B
53100C
53100D
53100E

CLASS 53100

STREAMLINED HIGH SPEED ZIG-ZAG MACHINES

CATALOG No. 112R

Union Special MACHINE COMPANY

CHICAGO

Aid Plant Layout! Boost Production!

PEDESTAL MOUNTED MACHINES

UNION SPECIAL'S pedestal mountings for sewing heads have offered a great many advantages to manufacturers ever since they were introduced as a revolutionary new type of mounting for feed-off-the-arm machines in Classes 35700 and 35800.

In the pedestal mounted type installation, the machine is completely isolated from the base and, where table boards are used, they are completely isolated from the pedestal and from the machine, which makes for smoother, quieter operation. In various cases, the motor may be mounted to the right or to the left under the machine handwheel. Mounting of the motor to the right provides maximum space under machine for the operator.

These new pedestals offer maximum flexibility, convenience, and adaptability to production lines, especially where variations in operation or garment styles are necessary from time to time. The foot treadles are adjustable laterally and the machine mounting bracket is adjustable vertically to suit the individual operator and to provide the most comfortable working position, thus reducing fatigue. The illustrations shown here are just a few of the many styles of machines that Union Special has to offer in the pedestal mounted type installation which manufacturers all over the world have found to be necessary equipment for increasing production.

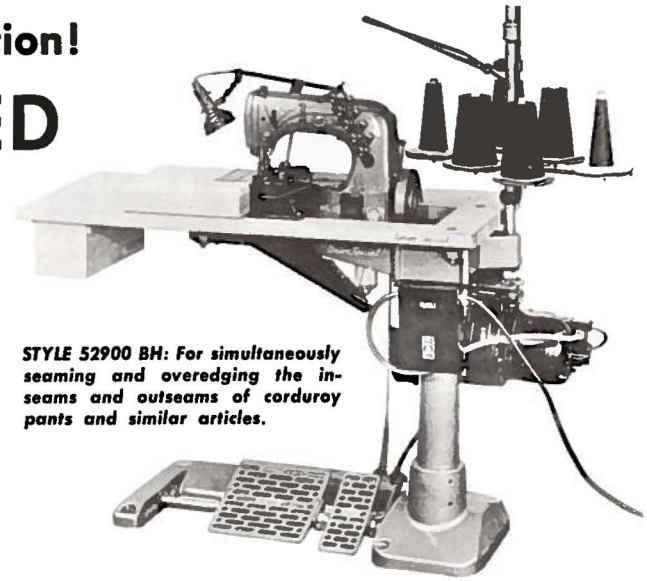

STYLE 52900 BH: For simultaneously seaming and overedging the inseams and outseams of corduroy pants and similar articles.

STYLE 54200 K: With sewing head overhanging pedestal, this new unit is ideally suited to pants and overall banding.

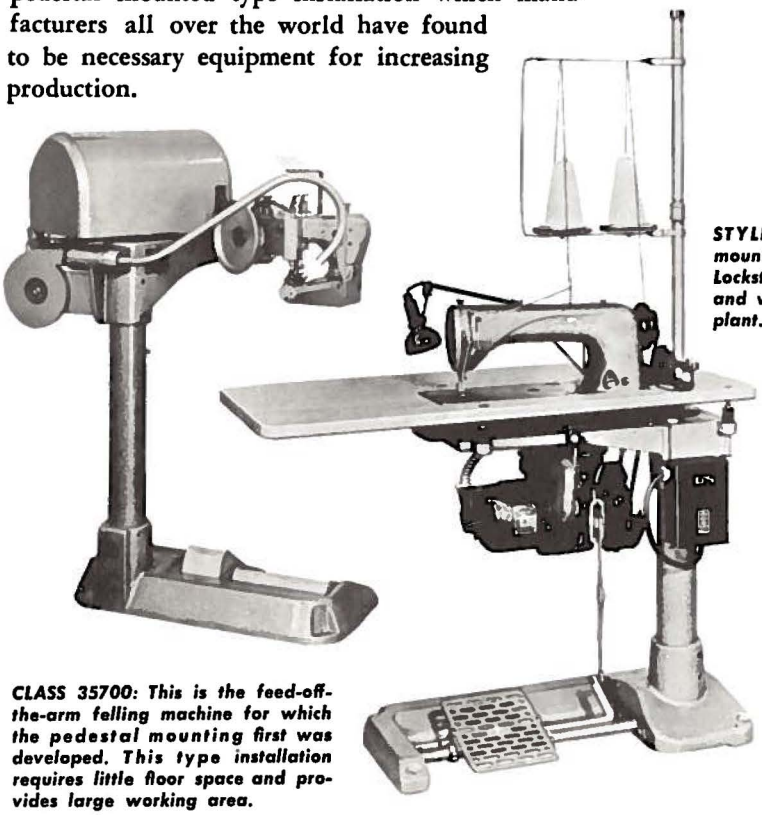

CLASS 35700: This is the feed-off-the-arm felling machine for which the pedestal mounting first was developed. This type installation requires little floor space and provides large working area.

STYLE 61400 A: The pedestal mounted, plain feed, single needle Lockstitch makes a most flexible and versatile unit for any sewing plant.

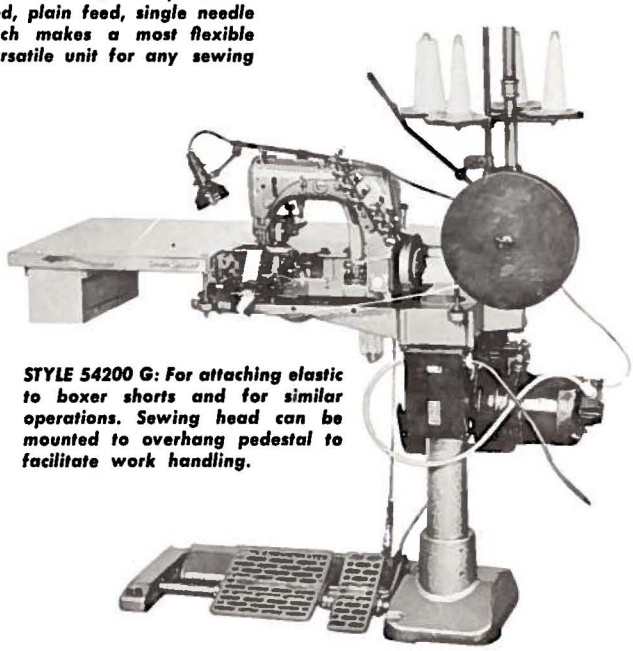

STYLE 54200 G: For attaching elastic to boxer shorts and for similar operations. Sewing head can be mounted to overhang pedestal to facilitate work handling.

Catalog No. 112 R

LIST OF PARTS

For Styles

53100 A 53100 C
53100 B 53100 D
53100 E

The parts listed in this catalog are furnished at list prices for repairs only.

First Edition

Union Special
MACHINE COMPANY
INDUSTRIAL SEWING MACHINES
CHICAGO

Printed in U.S.A.

October, 1966

FOREWORD

The 50000 series streamlined zig-zag machines covered by this catalog represent the latest design of Union Special's flat bed line. Class 53100 machines offer many advantages on various operations on a variety of garments such as nightgowns, slips, panties, foundations, children's knit undergarments, men's trousers, women's dresses, blouses, bed jackets and pajamas.

Light weight presser bar and needle bar driving mechanism make it possible to attain the utmost in speed and production. The new light weight parts and needle bearings make them lighter running and smoother operating. The light weight presser bar mechanism reduces pressure required to lift the presser foot.

Automatic lubrication and a new filter type oil return pump, used in conjunction with isolated mounting oil pan base plate, for returning filtered oil to the main reservoir, has made maintenance simple.

It is our constant aim to furnish carefully prepared information which will enable our customers to secure all possible advantages from the use of Union Specials. The following pages illustrate and describe the parts used in all of the machines covered in this catalog.

Union Special representatives will be found in all manufacturing centers, ready to cooperate with you to plan and estimate requirements.

Union Special MACHINE COMPANY

Engineering Department

IDENTIFICATION OF MACHINE

Each Union Special machine is identified by a Style number which is stamped into the name plate on the machine. Style numbers are classified as standard and special. Standard Style numbers have one or more letters suffixed, but never contain the letter "Z". Example: "Style 53100 A". Special Style numbers contain the letter "Z". When only minor changes are made in a standard machine, a "Z" is suffixed to the standard Style number. Example: "Style 53100 AZ".

Styles of machines similar in construction are grouped under a class number which differs from the style number, in that it contains no letters. Example: "53100".

APPLICATION OF CATALOG

This catalog applies specifically to the standard Styles of machines as listed herein. It can also be applied with discretion to some Special Styles of machines in this class. Reference to direction, such as right, left, front, back, etc., are given from the operator's position while seated at the machine. Operating direction of handwheel is toward the operator.

STYLES OF MACHINE

High Speed Streamlined Flat Bed, Single Needle, Medium Throw, Zig-Zag Machine. Lightweight Presser Bar and Needle Bar Driving Mechanism, Single Reservoir Enclosed Automatic Lubricating System, Filter Type Oil Return Pump and Oil Siphon Assembly. Lateral Looper Travel, Work Space to Right of Needle Bar 7 3/4 Inches.

53100 A For attaching and mitering lace to nightgowns, slips, and panties made from light to medium weight knit and woven fabrics of cotton, rayon, nylon, dacron and similar materials; also for hemming panels on two-way stretch foundations. Can be used for purl edge stitching on children's knit undergarments. Knee press for raising presser foot. Seam specification 404-LSa-1.

53100 B Power driven upper roller feed. For attaching pre-made waistband linings to tops or to waistband of men's trousers, giving hand felled effect. Folder No. 23450 L prepared to take waistbands ranging from 1 1/4 to 4 inches wide, in long lengths, entering from the right, and produces headings of from 1/8 to 3/4 inches. Seam specification 404-LSb-1.

53100 C Same as 53100 B, except without folder.

53100 D Same as 53100 A, except fitted with open toe "V" type presser foot and swing-up edge guide attached to the lower presser bar bushing, to be used for abutted edge seaming on slips and gowns. Seam specification 404-FSa-1.

53100 E Differential feed machine. For attaching lace to neck, armholes and bottom of nightgowns, slips, panties, gathering either the garment, lace or both together. Attaching tiers of lace to slips, dresses and nightgowns. Setting puff sleeves in blouses, bed jackets and pajamas. For operations on light to medium weight knit and woven fabrics of cotton, rayon, nylon, dacron and similar materials where a large percent of the work calls for intermittently or continuously gathered seams. Knee press for raising presser foot. Seam specification 404-LSa-1, FSa-1 or SSa-1.

NEEDLES

Each Union Special needle has both a type number and a size number. The type number denotes the kind of shank, point, length, groove, finish and other details. The size number, stamped on the needle shank, denotes the largest diameter of blade measured in thousandths of an inch, midway between the shank and the eye. Collectively, the type number and the size number is the complete symbol.

Standard needle for Styles 53100 A, D and E is Type 163 GA, and the standard needle for Styles 53100 B and C is Type 110 GAS.

Type No.	Description and Sizes
110 GAS	Round shank, round point, extra short, double groove, struck groove, ball eye, long spot, government, chromium plated - sizes 036, 040, 044.
163 GA	Round shank, round point, Picoetta, single groove, flat blade, long spot, chromium plated - sizes 027, 029, 032, 036.

To have needle orders promptly and accurately filled, an empty package, a sample needle, or the type and size number should be forwarded. Use description on label. A complete order would read: "1000 Needles, Type 110 GAS, Size 044".

Selection of the proper needle size should be determined by the size of thread used. Thread should pass freely through needle eye in order to produce a good stitch formation.

ORDERING REPAIR PARTS

ILLUSTRATIONS

This catalog has been arranged to simplify ordering repair parts. Exploded views of various sections of the mechanism are shown so that the parts may be seen in their actual position in the machine. On the page opposite the illustration will be found a listing of the parts with their part numbers, descriptions and the number of pieces required in the particular view being shown.

Numbers in the first column are reference numbers only, and merely indicate the position of that part in the illustration. Reference numbers should never be used in ordering parts. Always use the part number listed in the second column.

Component parts of sub-assemblies which can be furnished for repairs are indicated by indenting their descriptions under the description of the main sub-assembly. Example:

9	29476 LE	Looper Driving Lever Crank Assembly	1
10	22559 A	Screw, lower	2
11	51243 C	Ball Stud Guide	1
12	22729	Screw	1
13	22587	Screw, upper	2

It will be noted in the above example that the eccentric and bearing are not listed. The reason is that replacement of these parts individually is not recommended, so the complete sub-assembly should be ordered.

In those cases where a part is common to all of the machines covered by this catalog, no specific usage will be mentioned in the description, however, when the parts for the various machines are not the same, the specific usage will be mentioned in the description, and if necessary, the difference will be shown in the illustration.

ORDERING REPAIR PARTS (continued)

At the back of the book will be found a numerical index of all the parts shown in this book. This will facilitate locating the illustration and description when only the part number is known.

IDENTIFYING PARTS

Where the construction permits, each part is stamped with its part number. On some of the smaller parts, and on those where the construction does not permit, an identification letter is stamped in to distinguish the part from similar ones.

Part numbers represent the same part, regardless of catalog in which they appear.

IMPORTANT! ON ALL ORDERS, PLEASE INCLUDE PART NAME AND STYLE OF MACHINE FOR WHICH PART IS ORDERED.

USE GENUINE NEEDLES AND REPAIR PARTS

Success in the operation of these machines can be secured only with genuine Union Special Needles and Repair Parts as furnished by the Union Special Machine Company, its subsidiaries and authorized distributors. They are designed according to the most approved scientific principles, and are made with the utmost precision. Maximum efficiency and durability are assured.

Genuine needles are packaged with labels marked *Union Special*. Genuine repair parts are stamped with the Union Special trade mark. Each trade mark is your guarantee of the highest quality in materials and workmanship.

TERMS

Prices are strictly net cash and are subject to change without notice. All shipments are forwarded f. o. b. shipping point. Parcel Post shipments are insured unless otherwise directed. A charge is made to cover the postage and insurance.

OILING AND THREADING

The oil has been drained from the machine before shipping, and the reservoir must be filled before beginning to operate. Use a straight mineral oil with a Saybolt viscosity of 200 to 250 seconds at 100° Fahrenheit.

Oil is filled at the spring cap in the top cover, and the oil level is checked at the sight gauge on the front of the machine. The oil level should be maintained between the red lines on the gauge. The capacity of the oil reservoir is 12 ounces.

The machine is automatically lubricated, and no oiling, other than keeping the main reservoir filled is necessary.

A daily check before the morning start should be made and oil added if required. Oil which has gone through the machine is filtered and pumped back into the main reservoir, making too frequent oilings unnecessary. Excessive oil in the main reservoir may be drained at the plug screw in the main frame directly under the handwheel.

On the next page is a picture showing the manner in which the 53100 Styles covered in this catalog are threaded. The looper threading has been enlarged for clarity.

OILING AND THREADING DIAGRAM

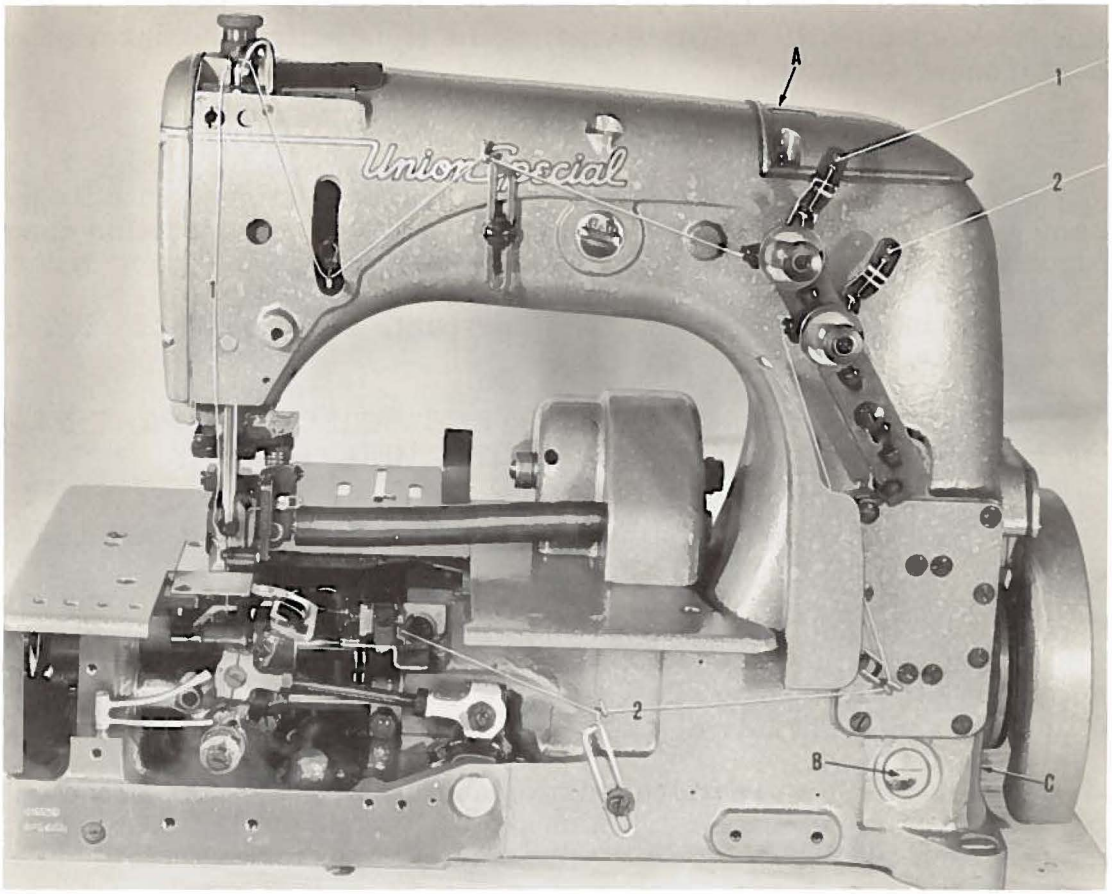

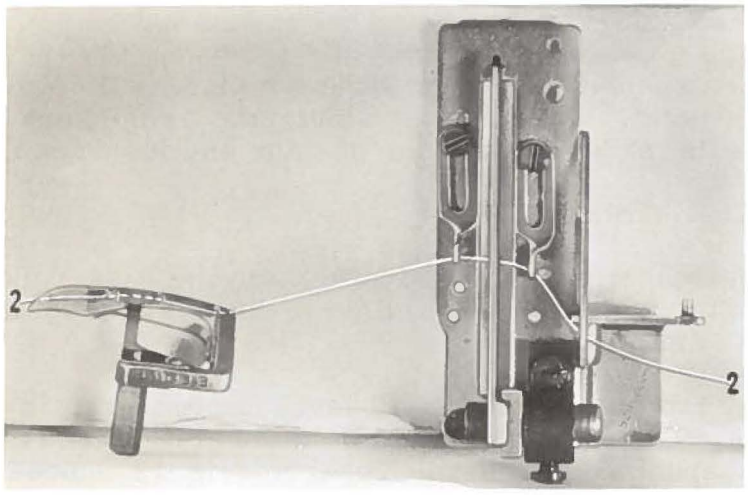

STYLE 53100 C

Oil has been drained from the machine before shipping, and the reservoir must be filled before beginning to operate. Oil is filled at spring cap (A). Oil level is checked at sight gauge (B). Use a straight mineral oil with a Saybolt viscosity of 200 to 250 seconds at 100° Fahrenheit. Excessive oil in the main reservoir may be drained at plug screw (C).

Thread machine as indicated, thread 1 is the needle thread, and thread 2 is the looper thread. The looper threading at the cast-off plate and looper has been enlarged for clarity.

SELF-PRIMING HEAD OIL SIPHON

Class 53100 machines are equipped with a self-priming head oil siphon. When the machine is started, oil splashes on the priming cup felts, filters through the felts, and trickles down the vertical oil tube, thus, priming the siphon. Once the prime is established, it is maintained, unless the felts are removed. The siphon operates twenty-four hours a day, removing oil at the rate of six to twelve drops per minute, which of course, far exceeds the rate at which oil collects in the head.

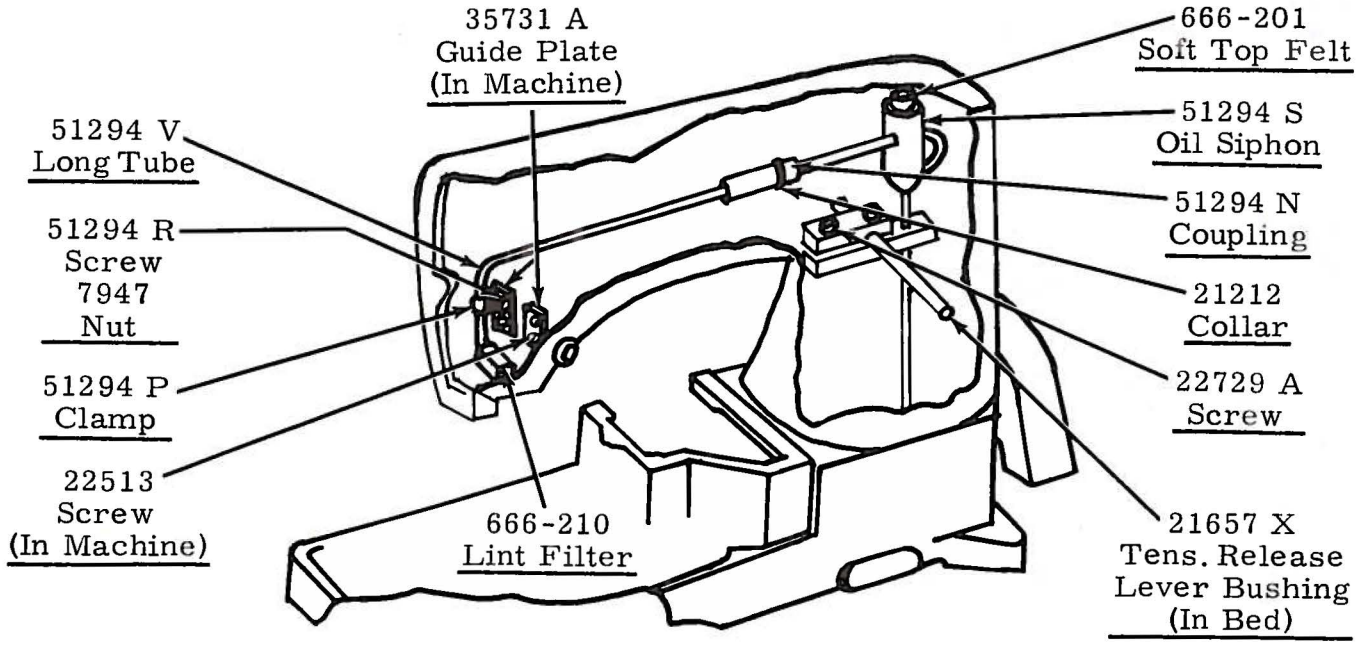

INSTALLING AND MAINTENANCE OF OIL SIPHON

A newly installed siphon starts its action within three to five minutes after the machine is operating. However, it may be twenty minutes or so before all the air is removed from the line and the siphon is in full operation. In Class 53100 machines without a head sump, the head will be free of excess oil by that time.

The felts in the priming cup are designed for a specific purpose. The bottom felt, 666-209, is thin and relatively dense, to meter the flow of priming oil and to prevent the entrance of air. The softer top felt, 666-201, is a filter to prevent the clogging of the metering felt. This felt, at the intake of the siphon, keeps the siphon clear of lint, and prevents the entrance of air at that point. For the best initial self-priming condition, the felts of the siphon should be dry. In this condition, it is difficult for air to be trapped between the felts or in the top soft felt itself.

However, if for some reason the priming cup felts had been oiled before installing, the siphon may fail because air is trapped between the felts or in the soft top felt. As a precaution, remove the soft felt from the cup. Then, while squeezing the felt between the fingers, saturate it well with oil. In other words, squeeze out the air and replace it with oil. Then, completely fill the cup with oil and push or twist the soft felt down into cup so that it definitely contacts the harder thin felt. This precaution prevents the trapping of air, and no trouble should be experienced when starting the siphon.

If you want to be doubly sure that the siphon is functioning correctly, on a machine in operation, apply a certain amount of oil in the sump around the felt in the head. Before doing this, be certain that this felt has been saturated in the same manner as explained for the soft felt in the top of the siphon cup. When this is done, the siphoning action will begin, and the oil will be removed as explained.

NEEDLE LEVER STUD SETTING

Observe the location of the needle lever stud (A, Fig. 1). The head of the needle lever stud is marked with an arrow and the word "UP". These studs are set correctly when the arrow points vertically up. Also check the position of the needle lever bearing oiler (B) inside the arm casting, which lubricates the needle lever stud. Make sure it is tilted downwardly and that its delivery end (C) contacts the inside wall of the bed casting at the back, just above the notch of the needle lever shaft stop collar. Do not allow the oil tube to rest on the needle lever.

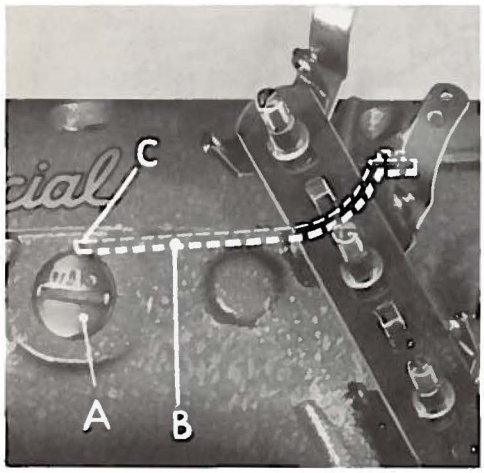

Fig. 1

OILING SYSTEM

Clean machine thoroughly. Fill oiling system to the first red line of oil gauge on the front of the machine, and oil all bearings. Run machine slowly for a minute to allow oil wicks to carry oil to the bearings. Then, recheck oil in oiling system and run machine for five minutes. Run Styles 53100 A, D, and E at 4500 R.P.M. and Styles 53100 B and C at 4000 R.P.M. Inspect siphon and head felt for proper function, and all plug screws for leakage.

SETTING THE ZIG-ZAG MOTION

Set the zig-zag motion to the maximum travel that the needle hole in the throat plate will permit. This can be accomplished by moving the ball joint (A, Fig. 2) in the segment lever (B) located under the cover directly above the handwheel on the right side of machine. Moving it away from the operator increases the zig-zag motion and toward the operator acts the reverse.

The cam gear pinion, located on the crank shaft adjacent to the handwheel housing, should be set so that the lateral zig-zag motion of the needle bar occurs when the needle is completely out of the work. This is accomplished by loosening the set screws in the pinion; then, while holding the gear train in a fixed position, turning the handwheel either forward or backward until the desired timing is obtained.

SPACING NEEDLE IN THROAT PLATE

Equalize the clearance between the needle (A, Fig. 3) and the right and left sides of the needle hole (B) in throat plate (C). This is accomplished by loosening set screw (D) and turning the eccentric stud (E) clockwise or counterclockwise until the described clearance has been obtained. Retighten set screw.

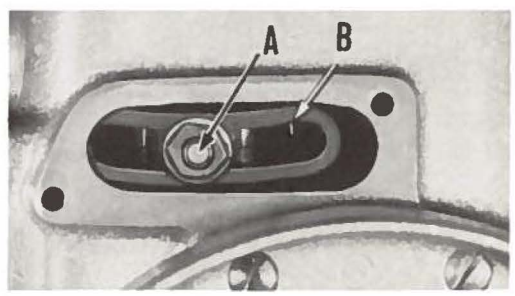

Fig. 2

If additional adjustment is required, it can be obtained by loosening set screw (A, Fig. 4) and turning the eccentric ball joint stud (B), located at the right end of the needle bar frame under the top cover, either clockwise or counterclockwise.

SETTING THE LOOPER

Insert a new needle, size as specified, Type 163 GA for Styles 53100 A, D, E and Type 110 GA for Styles 53100 B and C.

With the zig-zag motion at the end of its stroke to the right, set the looper (A, Fig. 5) so the distance from the center of the needle (B) to the point of the looper is 5/32 inch, when the looper is at its farthest position to the right. Looper gauge No. 21225-5/32 (C) can be used advantageously in making this adjustment. If adjustment is needed, loosen nut (D) (it has a left hand thread) and also loosen nut on right end of connecting rod (E), turn connecting rod forward or backward to obtain 5/32 inch and retighten both nuts.

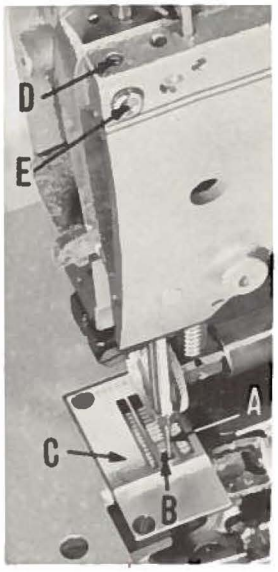

Fig. 3

The looper is set correctly in line with the feed when there is .003 inch space between its point (A, Fig. 6) and the rear of the needle (B) as the former is ascending on the right side. If adjustment is needed, loosen screw (F, Fig. 5) and move looper toward or away from needle as required and retighten screw when .003 inch space is obtained.

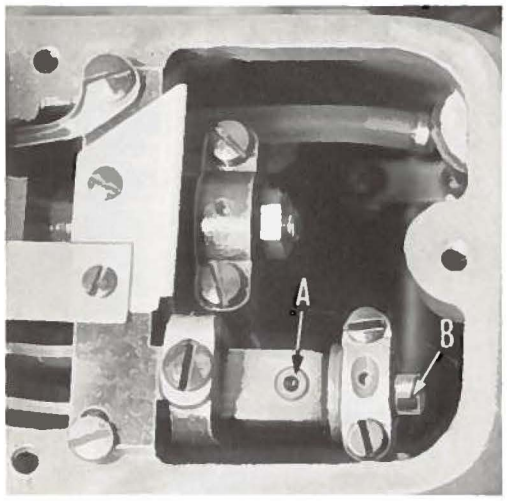

Fig. 4

SETTING HEIGHT OF NEEDLE BAR

The height of the needle (A, Fig. 7) is correct when the top of its eye is 1/64 inch below the underside of the looper, with the looper point flush with the left side of the needle and the needle is ascending on the left side. If adjustment is necessary, loosen screws (B) and move needle bar (C) up or down as required and retighten screws.

SYNCHRONIZING LOOPER AND NEEDLE MOTIONS

Turn the handwheel in the operating direction until the looper point (A, Fig. 8) moves to the left and is even with the left side of the needle (B). Note the height of the eye of the needle with respect to the looper point, then, turn the handwheel in the reverse direction until the looper point again moves to the left, and is even with the left side of the needle. If the motions synchronize, the height of the eye of the needle with respect to the looper point will be the same. A variation of .005 inch is allowable. If the distance from the eye of the needle to the point of the looper is longest when the pulley is turned in the operating direction, move the looper drive lever shaft synchronizing stud (C) to the rear. Moving it in the opposite direction acts the reverse.

Moving of the looper drive lever shaft synchronizing stud is accomplished as follows: Loosen clamp screw (D) of looper drive lever.

To move stud to rear (away from operator), a light tap with a small hammer, directly on the stud, is all that is required.

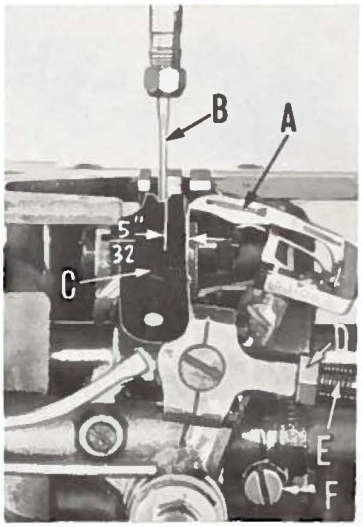

Fig. 5

SYNCHRONIZING LOOPER AND NEEDLE MOTIONS (continued)

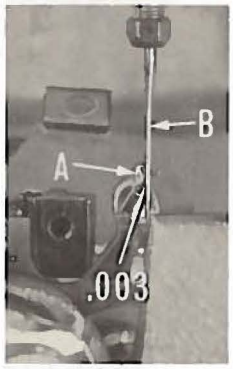

Fig. 6

To move stud forward (toward operator), remove the cloth plate, oil reservoir top cover, oil reservoir back cover, and on Styles 53100 B and C, remove the clutch drive housing; then, a light tap on the looper drive lever rocker shaft, toward the operator, is all that is required.

Then, using the looper drive lever to take up the end play between the looper drive lever rocker shaft and its synchronizing stud, tighten the looper drive lever on the shaft using screw (D, Fig. 8).

Reset the zig-zag motion to maximum that the needle hole in throat plate will permit (allow .010 to .015 inch clearance between the side of needle and needle hole).

SETTING THE FEED DOG

For Styles 53100 A, B, C and D, set the feed dog (A, Fig. 9) in the throat plate (B) so there is equal clearance on all sides. See that the tips of the teeth are parallel with and 3/64 inch above the throat plate at high point of travel. Adjust the supporting screw (C), under the feed dog, to maintain this setting. Screw (D) is used to hold feed dog in position.

If feed dog teeth are not parallel with the throat plate, loosen nut (A, Fig. 10) and turn screw (B) clockwise to lower the front teeth, and counterclockwise to raise the front teeth. Retighten nut when feed dog is set properly.

Should it be necessary to move the feed dog to the left or right, loosen screws (A, Fig. 11) which hold the feed rocker (B) onto the feed rocker shaft (C), and move feed rocker to desired position and retighten screws. Make sure that the feed rocker arm (D) does not bind after making this adjustment.

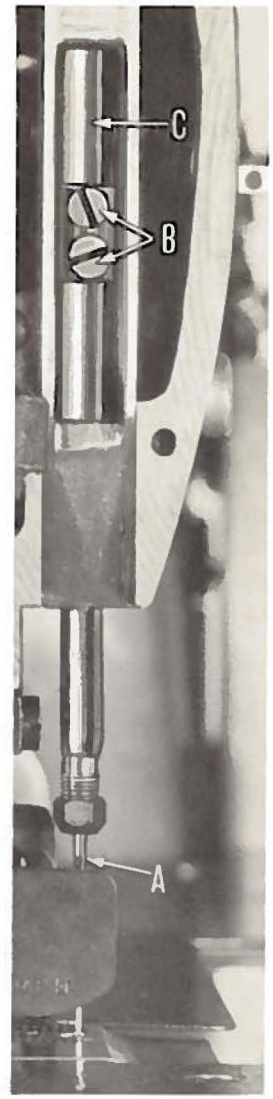

Fig. 7

Should it be necessary to move the feed dog forward or backward, loosen screws (E) which clamp the feed rocker arm to the feed rocker and move the feed rocker forward or backward as needed, and retighten screws.

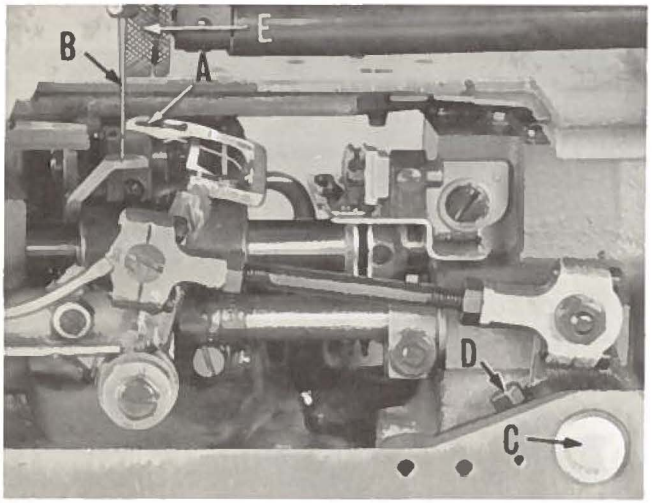

Fig. 8

For Style 53100 E, set the main feed dog so that it is level with the throat plate, and that at its high position, it extends the depth of a tooth above the throat plate. Maintain this adjustment by means of the stop screw under the feed dog holder.

Space the feed dog laterally, so that there is equal clearance between the feed prongs and the throat plate slots. Loosen feed dog holding screws and move feed dog from side to side for this adjustment. If more adjustment is needed, the feed dog may be moved laterally the same as described in paragraph 3.

With an average stitch length setting, equalize the travel of the feed dog so that, at both ends of its travel, it is equidistant from the ends of the throat plate slot. Make this adjustment the same as described in paragraph 4.

Set the height of the differential feed dog to correspond with that of the main feed dog by moving it up or down in its holder.

Turn handwheel in operating direction until the feed dog is at its farthest point of travel to the rear, and set the differential feed so that there is 1/64 inch clearance between the center row of teeth and the end of the throat plate slot. This is done by loosening the two headless screws which clamp the shank of the differential feed bar. The throat plate support will have to be removed for access. Also level the feed during this adjustment.

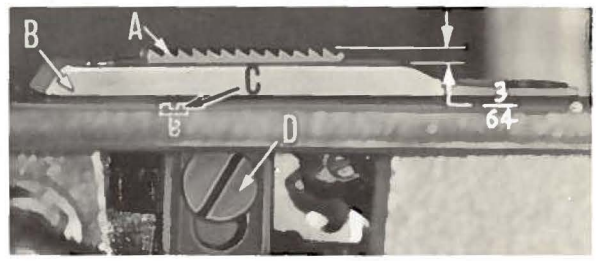

Fig. 9

Set the front stop for the intermittent differential feed lever as far forward in its slot as it will go. Turn the handwheel in operating direction until the feed dogs are descending. When the tips of their teeth are flush with the top of the throat plate, manipulate the differential feed control lever up and down. At this point, there should be no more than 1/64 inch motion in the differential feed dog. If more motion exists, loosen the three screws which hold the segment slot plate to the feed rocker, and manipulate the position of the slot plate until excess motion of the differential feed dog is eliminated. An offset screw driver will be required for this adjustment.

Continue to turn the handwheel in operating direction until the feed dog reaches its most forward point of travel. Depress the differential feed control lever until the front of the differential feed dog just clears the throat plate slot by 1/64 inch and set the rear stop for the differential feed control lever against the lever pointer at this position.

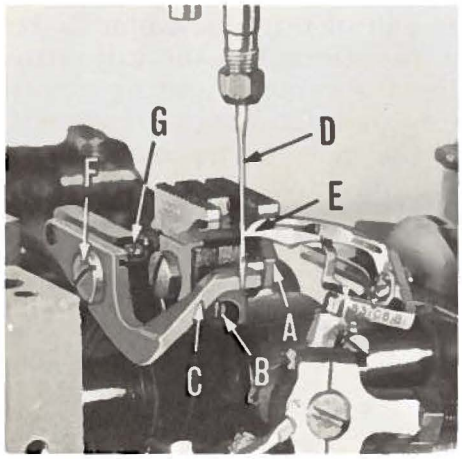

Fig. 10

CHANGING STITCH LENGTH

Set the stitch to required length. This is accomplished by loosening the lock nut (F, Fig. 11) (it has a left hand thread) on the end of the stitch regulating stud and turning the stitch adjusting screw (G) located under the left end of the cloth plate, in the head of the main shaft (H). Turning screw in a clockwise direction shortens the stitch, and turning screw in a counterclockwise direction lengthens the stitch.

SETTING THE NEEDLE GUARD

Set the needle guard (C, Fig. 10) horizontally so that it barely contacts the needle (D). It should be set as low as possible, yet have its vertical face remain in contact with the needle until the point of the looper (E), moving to the left, is even with the needle and the latter is ascending on the left side. To move needle guard forward or backward, merely loosen screw (F), move needle guard as required, and retighten screw. To raise or lower needle guard, loosen screw (F), and turn screw (G) clockwise to lower needle guard, and counterclockwise to raise needle guard. Retighten screw (F) after guard is set properly.

NOTE: Any change in stitch length will require a change in the needle guard setting.

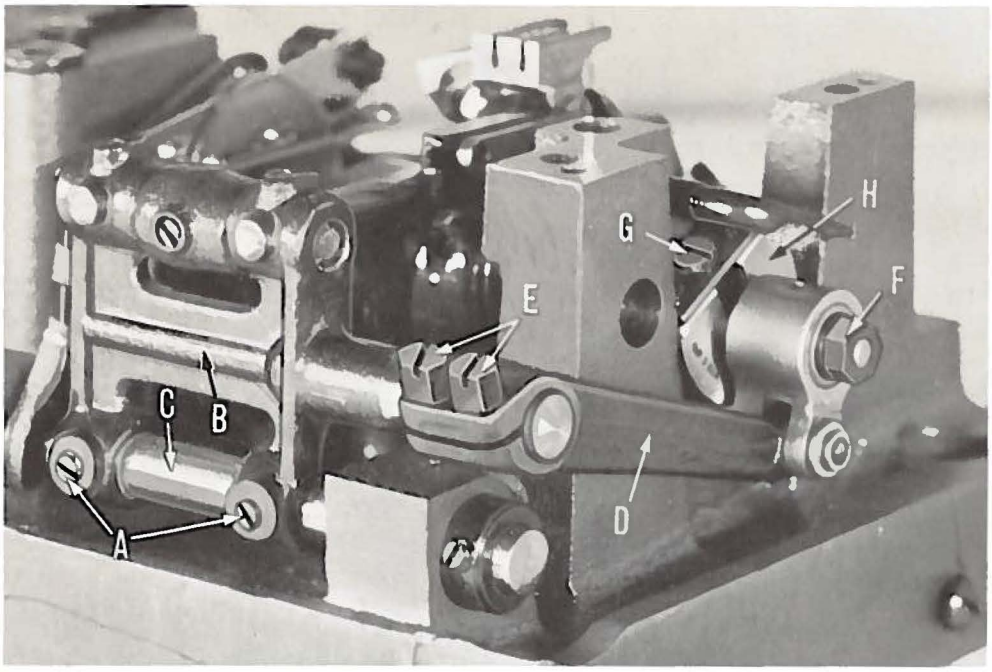

Fig. 11

SYNCHRONIZATION OF THE UPPER ROLLER FEED

On Styles 53100 B and C, synchronize the upper roller feed (E, Fig. 8) with the lower feed dog. This is accomplished by removing the plug screw (A, Fig. 12) from the top of the housing (B) located at the rear right side of the machine. Then, after noting the direction the shaft journaled in the housing rotates, loosen the clamp screws in the gear hub, made accessible by removal of the plug screw. Turning this back shaft in its operating direction causes the top roller feed to start turning sooner, and turning the shaft backward causes the puller roll to start turning later.

The travel of the top roller feed is adjusted at the left end of this back shaft. Its adjustment is identical to the stitch length adjustment mentioned in the adjusting instructions under "CHANGING STITCH LENGTH". It has the same adjusting screw and left hand thread lock nut arrangement. When loosening or tightening the lock nut, do not hold the handwheel to maintain shaft position, as the gear on the crankshaft might shift, which would make it necessary to re-time the machine. Instead, insert a screw driver through the access hole (C) in the top of the gear housing at the left end and engage the adjusting screw. By holding the screw driver in this manner, the lock nut may be loosened or tightened without disturbing the gear setting.

NOTE: The adjustment just mentioned and the regulation of the pressure on the presser foot are very important to the appearance of the finished seam.

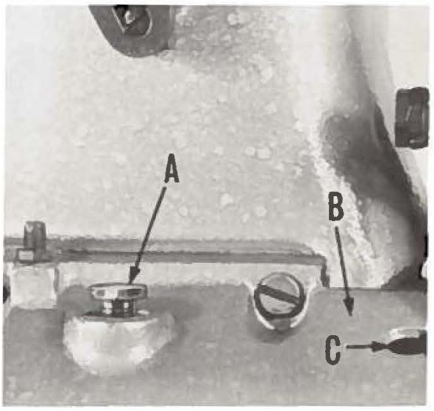

Fig. 12

THREADING

Draw looper and needle threads into the machine and start operating on a piece of fabric. Refer to threading diagram on Page 8 , for manner of threading these machines.

SETTING THE LOOPER THREAD TAKE-UP

The cast-off plate (A, Fig. 13) should be set over the take-up so that there is equal clearance on each side. The looper thread take-up (B) is not spotted on the main shaft, and consequently, can be set to compensate for varying conditions. It is set correctly, when the looper thread is just cast off the highest lobe of the take-up when the point of the needle (C) is clearly visible below the underside of the looper (D). The looper thread eyelets (E), located on the cast-off plate, are adjustable, and their setting determines the amount of thread pulled off by the take-up. Moving the eyelets to the rear causes more thread to be pulled from the cones, and moving them forward causes less thread to be pulled off. Set the eyelets so that, when the looper reaches its extreme position to the left, all the slack has been removed from the looper thread, but it has not become taut. The retaining finger (F) controls the amount of slack thread in the system, and it is set correctly when it prevents the looper thread triangle from being wiped under the blade of the looper when the looper moves from right to left.

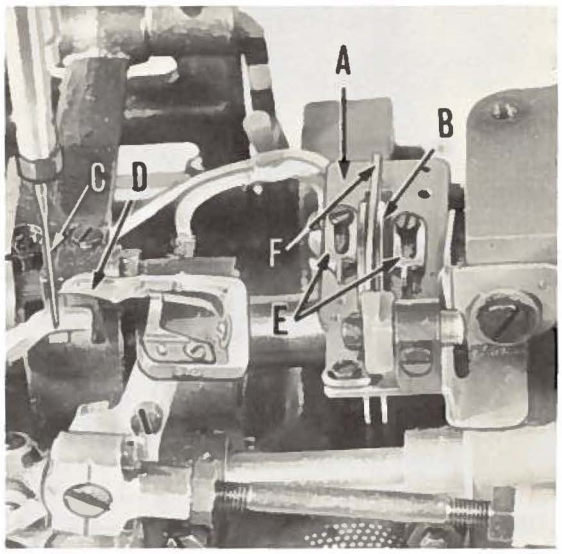

Fig. 13

THREAD TENSIONS

The tension on the needle thread should be only sufficient to produce uniform stitches on the under surface of the fabric. The tension on the looper thread should be just sufficient to steady the thread.

PRESSER FOOT PRESSURE

Regulate the presser spring regulating screw (A, Fig. 14) so that it exerts only enough pressure on the presser foot to feed the work uniformly. This is located directly behind the needle bar in the head of the machine. Also, regulate the pressure on the upper roller feed, using only enough pressure to insure the uniform feeding of the material being sewn.

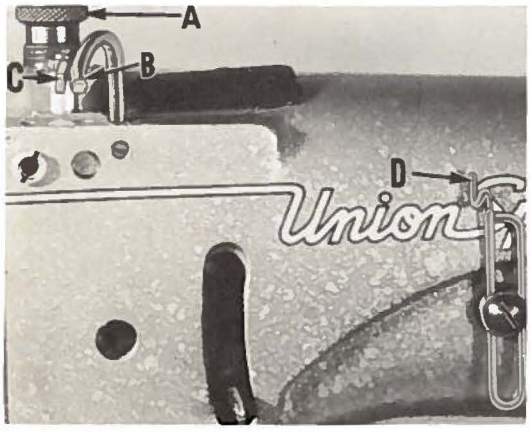

Fig. 14

SETTING NEEDLE THREAD TAKE-UP

Set the needle thread take-up (B, Fig. 14), located adjacent to the needle bar thread eyelet (C), so that its upper surface projects 3/32 inch above the line of thread when the needle bar has completed its downward stroke. Set the needle thread frame eyelet (D) so the smallest noticeable amount of thread is drawn through the needle thread tension while the needle is descending. (Setting this eyelet too high can cause the needle thread around the looper to be pulled from under the front retainer prematurely).

SETTING SPRING RETAINERS ON LOOPER

The spring retainers (A, Fig. 15) on the looper (B) are set correctly when they exert only enough pressure on the needle thread, around the looper, to retard this thread long enough for the descending needle to reach a point where the thread released by these retainers cannot fly or be pulled to the left of the needle.

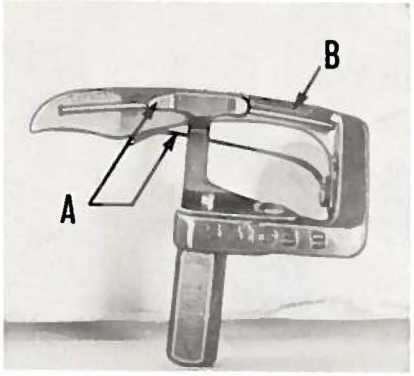

Fig. 15

THREAD TENSION RELEASE

The thread tension release is set correctly when it begins to function as the presser foot is raised to within 1/8 inch of the end of its travel and is entirely released when the presser foot reaches its highest position. On Styles 53100 B and C, adjust feed roller lifter connection so that, when the presser foot and the feed roller are raised, the feed roller does not contact the presser foot.

SETTING THE ATTACHMENTS

On Styles 53100 B and C, set the folder as close to the presser foot as possible and still allow free passage of the body and waistband material. Adjust it laterally so that there is 3/16 inch margin on the under ply of the canvas to the left of needle. Set the upper folder so that the needle penetration is 1/32 inch from the top edge of the canvas. Set the body guide so that there is a margin of 1/4 inch to the right of needle. Adjust the canvas guide to conform to the width of the canvas. The folder is adjustable to take waistbands from 1 3/4 to 4 inches wide. To adapt folder for the extreme narrow width, remove the right hand attaching screw for the canvas guide and for the extreme wide width, remove the left attaching screw.

Styles 53100 D and E are equipped with a swing-out edge guide for abutted edge seaming. The edge guide should be set down snugly against the stitch tongue in the throat plate. There is an in and out adjustment screw and lock nut for increasing or decreasing the space between the two abutted edges.

Style 53100 E is equipped with an auxiliary pressure plate to produce gathering or ruffling. If set on the right side of and against the swing-out edge guide, the right ply will be ruffled. If set on the left side of and against the swing-out edge guide, the left ply will be ruffled. The pressure plate should be set so that the distance from its edge to the front edge of the throat plate is 19/32 inch.

EXPLODED VIEWS

AND

DESCRIPTION OF PARTS

FOR

CLASS 53100 ZIG-ZAG MACHINES

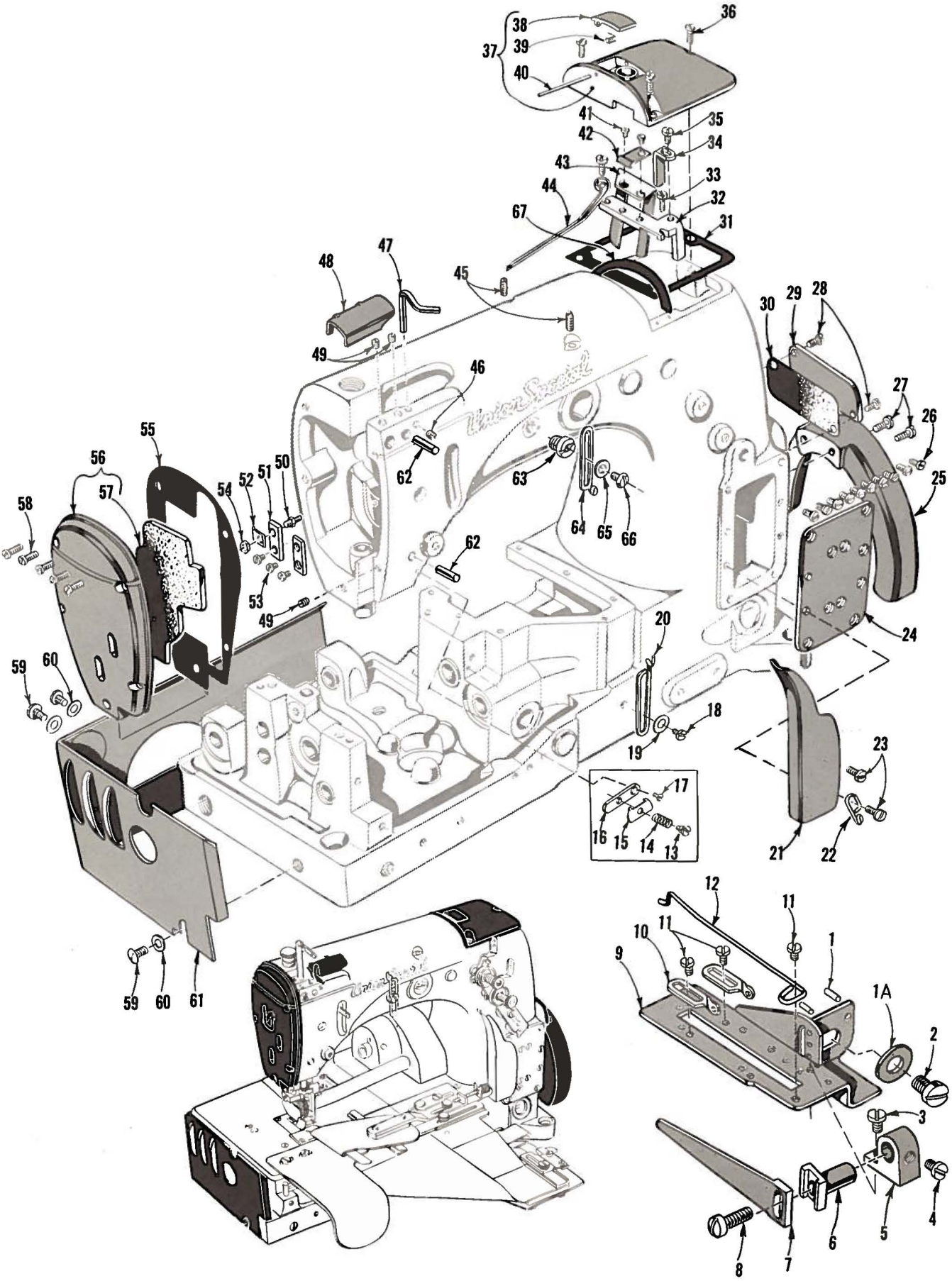

MAIN FRAME, CAST-OFF PLATE, MISCELLANEOUS COVERS AND PLATES

Ref. No.	Part No.	Description	Amt. Req.
1	50-216 Blk.	Dowel Pin	2
1A	21657 E	Washer	1
2	22528	Screw	1
3	22768	Screw	1
4	87 U	Screw	1
5	52904 E	Retaining Finger Support Bracket	1
6	52804 E	Retaining Finger Support	1
7	52904 B	Retaining Finger	1
8	22516	Screw	1
9	52957 C	Cast-Off Support Plate	1
10	52958 D	Eyelet	2
11	73 A	Screw	3
12	52904 G	Cast-Off Wire	1
13	57 WD	Nipper Spring Screw, for Styles 53100 A, D, E	1
14	15438 C	Nipper Spring, for Styles 53100 A, D, E	1
15	57 WB	Nipper Spring Plate, for Styles 53100 A, D, E	1
16	43296	Thread Nipper Base, for Styles 53100 A, D, E	1
17	605 A	Screw, for Styles 53100 A, D, E	1
18	98 A	Screw	1
19	20	Washer	1
20	539	Frame Thread Eyelet	1
21	53191	Looper Thread Guard	1
22	51758	Looper Thread Lead-In Eyelet	1
23	93	Screw	2
24	53182 E	Cam Gear Fork Frame Support Plate	1
25	AB21375 AH	Belt Guard	1
26	22570 A	Screw	10
27	93	Screw	2
28	22570 A	Screw	2
29	53182 F	Cover Plate	1
30	53182 G	Gasket	1
31	53182 A	Crank Chamber Cover Gasket	1
32	53137 C	Needle Bar Frame Guide Plate, front	1
33	22760 B	Screw	2
34	53137 D	Needle Bar Frame Guide Plate, rear	1
35	376	Screw	1
36	22569 B	Screw	3
37	53182	Crank Chamber Cover	1
38	39582 L	Oil Cap	1
39	52882 AC	Oil Cap Torsion Spring	1
40	50-789 Blk.	Oil Cap Hinge Pin	1
41	22564 B	Screw	2
42	53182 N	Oil Shield	1
43	53182 B	Baffle Plate	1
44	53182 C	Needle Lever Bearing Oiler	1
45	719	Screw	2
46	22565	Screw	1
47	53170	Take-Up Wire	1
48	53182 D	Needle Bar Frame Cover	1
49	22565	Screw	3
50	51294 R	Screw	1
51	35731 A	Presser Bar Connection Guide Plate	2
52	51294 P	Oil Tube Clamp	1
53	22513	Screw	3
54	7947	Nut	1
55	53182 K	Gasket	1
56	53182 J	Head Cover	1
57	53182 L	Felt Liner	1
58	22569 B	Screw	5
59	22848	Screw	3
60	20	Washer	3
61	51282 AH	Oil Shield, end and back, for Styles 53100 A, B, C, D	1
62	53137 A	Needle Bar Frame Guide Pin	2
63	22889 A	Plug Screw	1
64	539	Needle Thread Eyelet	1
65	20	Washer	1
66	22848	Screw	1
67	53182 M	End Gasket	1

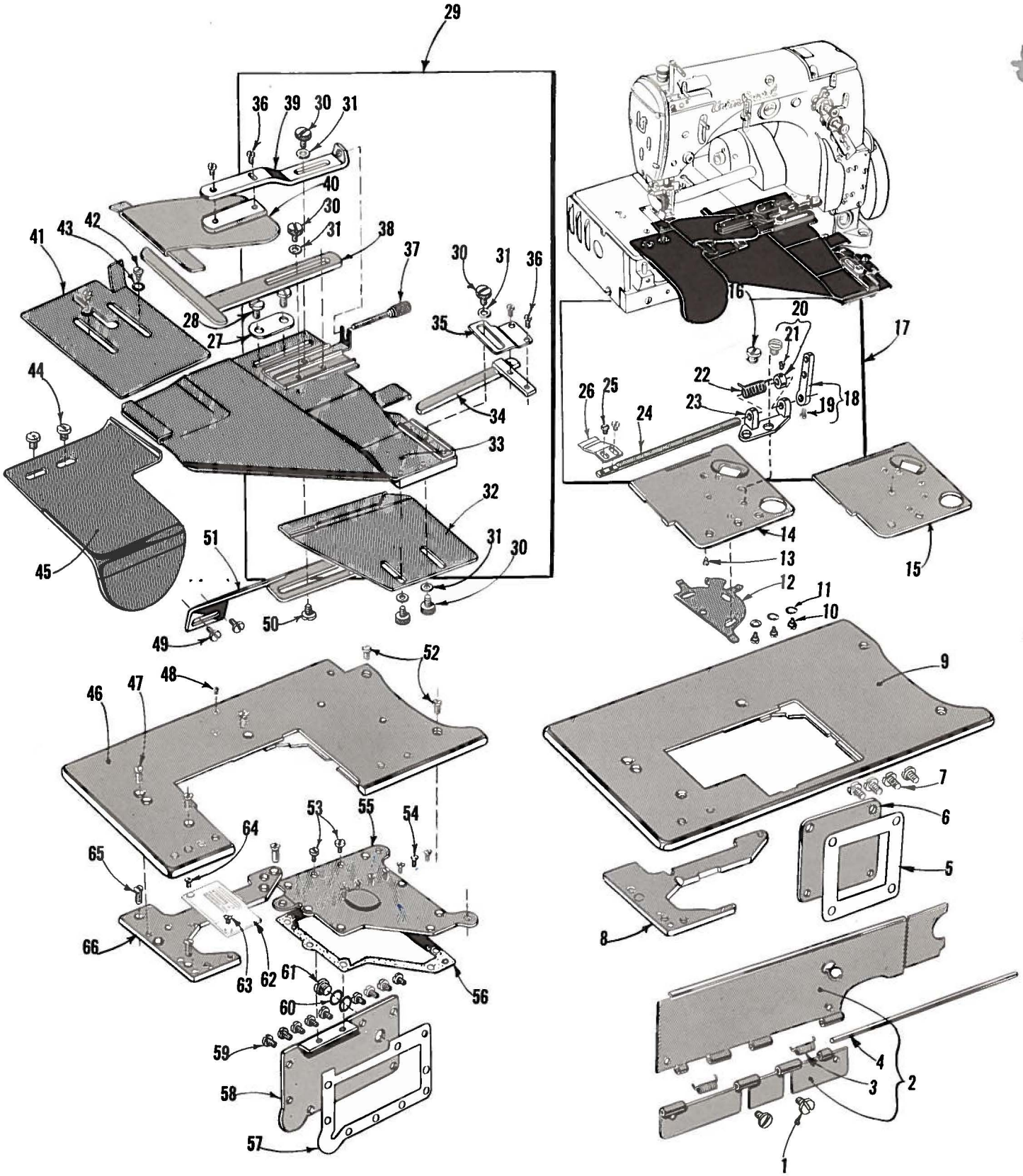

CLOTH PLATES, CLOTH PLATE COVERS, MISCELLANEOUS COVERS AND ATTACHMENTS

Ref. No.	Part No.	Description	Amt. Req.
1	25 S	Screw	2
2	51282 AJ	Oil Shield, front, for Styles 53100 A, C, D, E	1
3	51282 AK	Spring	2
4	52978 G	Hinge Pin	1
5	52882 U	Gasket, for Styles 53100 A, D, E	1
6	52882 AE	Crank Chamber Cover, for Styles 53100 A, D, E	1
7	22548	Screw, for Styles 53100 A, D, E	4
8	51480 C	Throat Plate Support, for Style 53100 E	1
9	51301 D	Cloth Plate, for Styles 53100 A, D, E	1
10	22760 A	Screw, for Styles 53100 A, D, E	3
11	35772 H	Washer, for Styles 53100 A, D, E	3
12	51281 AC	Cloth Plate Cover Spring, for Styles 53100 A, D, E	1
13	22845 B	Pivot Screw, for Styles 53100 A, D, E	1
14	51281 AJ-219	Cloth Plate Cover, for Style 53100 E	1
15	51281 T-219	Cloth Plate Cover, for Styles 53100 A, D	1
16	25 C	Screw, for Style 53100 E	2
17	29480 BZ	Auxiliary Presser Plate Assembly, for Style 53100 E	1
18	39531 F	Operating Lever	1
19	77 A	Screw	1
20	39531 B	Shaft Collar	1
21	604	Screw	1
22	39531 C	Spring	1
23	53132 B	Auxiliary Pressure Plate Bracket	1
24	53132 A	Pressure Plate Shaft	1
25	22561	Screw	2
26	53132	Auxiliary Pressure Plate	1
27	23425 V	Washer Plate	1
28	22514	Screw, for Style 53100 B	2
29	23450 L	Waistband Folder, complete, for Style 53100 B	1
30	188 D	Screw	5
31	8372 A	Washer	5
32	23450 U	Lower Scroll, adjustable	1
33	23450 M	Folder Base	1
34	23450 P	Adjustable Waistband Guide, lower	1
35	23450 R	Adjustable Support, for waistband guide, lower	1
36	90	Screw	4
37	23450 V	Adjusting Screw	1
38	23450 N	Adjustable Waistband Guide, upper	1
39	23450 T	Top Scroll Support, adjustable	1
40	23450 S	Top Scroll	1
41	53102	Cloth Plate Cover, for Styles 53100 B, C	1
42	22760 A	Screw	2
43	35772 H	Washer	2
44	25 C	Screw	2
45	23450 W	Edge Guide, for Style 53100 B	1
46	53101	Cloth Plate, for Styles 53100 B, C	1
47	80	Screw	3
48	22845 B	Screw	1
49	88 D	Screw	2
50	25 S	Screw	1
51	23437 G	Folder Support Bracket, for Style 53100 B	1
52	22839 C	Screw	2
53	22585 A	Screw	2
54	22524	Screw	7
55	53782 B	Oil Reservoir Top Cover	1
56	51382 A	Gasket	1
57	52982 E	Gasket	1
58	52982 D	Oil Reservoir Back Cover	1
59	22848	Screw	9
60	41394 A	Gasket	2
61	22733 B	Screw	1
62		Throat Plate (See Page 37)	1
63	222 D	Screw, for Styles 53100 B, C	1
64	87	Screw, for Styles 53100 B, C	1
	87	Screw, for Styles 53100 A, D, E	2
65	80	Screw	3
66	51280 AA	Throat Plate Support, for Styles 53100 A, B, C, D	1

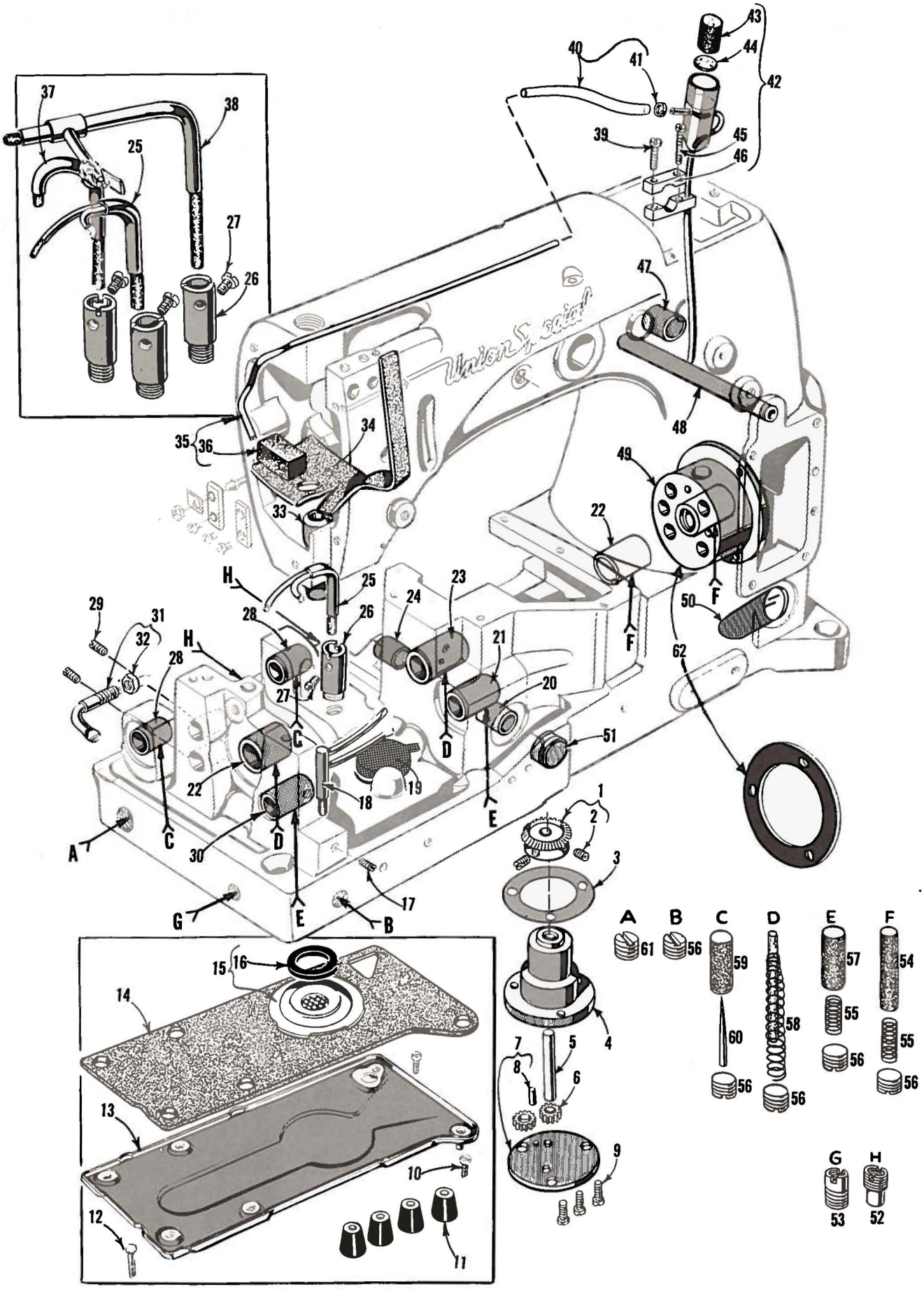

MAIN FRAME, BUSHINGS AND MISCELLANEOUS OILING PARTS

Ref. No.	Part No.	Description	Amt. Req.
1	51493 BQ	Pump Driven Gear	1
2	531	Screw	2
3	643-127 Blk.	Gasket	1
4	51493 AG	Oil Pump Housing	1
5	51493 D	Oil Pump Driving Shaft	1
6	51493 E	Pump Driving Shaft Gear	2
7	51493 AH	Oil Pump Housing Cover	1
8	50-294 Blk.	Pin	1
9	22569 B	Screw	3
10	22823 A	Screw	2
11	51295 A	Mounting Isolator	4
12	22823 B	Screw	1
13	51493 AY	Oil Pan Base Plate	1
14	51493 BG	Base Plate Felt Pad	1
15	51493 BH	Filter Cap Assembly	1
16	51493 BJ	Washer, sponge rubber	1
17	22560 B	Screw	1
18	52894 AK	Oil Tube, for looper rocker and left ball joint	1
19	51493 BK	Lint Filter Screen	1
20	52942 W	Looper Drive Lever Shaft Bushing, front	1
21	51244 M	Looper Rock Shaft Bushing, right	1
22	52890 C	Main Shaft Bushing, left and inner right	2
23	51290 T	Main Shaft Bushing, middle	1
24	52942 X	Looper Drive Lever Shaft Bushing, rear	1
25	52794 G	Oil Tube, for feed lift and looper avoid eccentric	1
26	52894 AB	Oil Tube Holder, for Styles 53100 A, B, C, D	1
	52894 AB	Oil Tube Holder, for Style 53100 E	3
27	90	Screw, for Styles 53100 A, B, C, D	1
	90	Screw, for Style 53100 E	3
28	52836 P	Feed Rocker Shaft Bushing	2
29	22597	Screw, for Style 53100 E	2
30	52836 R	Looper Rocker Shaft Bushing, left	1
31	660-136	Oil Tube, for feed crank link	1
32	258 A	Nut	1
33	51257 AA	Lower Presser Bar Bushing	1
34	666-210	Oil Attraction Felt	1
35	51294 V	Oil Siphon Tube	1
36	666-211	Felt Lint Filter	1
37	52894 AD	Oil Tube, for differential feed bar shaft, for Style 53100 E	1
38	52894 AE	Oil Tube, for differential feed bar guide, for Style 53100 E	1
39	22729 A	Screw	1
40	51294 N	Oil Tube Connection	1
41	21212	Oil Siphon Connection Locking Ring	1
42	51294 S	Oil Siphon Assembly	1
43	666-201	Felt Plug	1
44	666-209	Felt Plug	1
45	22729 B	Screw	1
46	51294 K	Upper Clamp	1
47	52883 R	Presser Foot Lifter Lever Bushing	1
48	21657 X	Tension Release Lever Shaft Bushing	1
49	52891 B	Main Shaft Housing, including bushing	1
50	50-648 Blk.	Lucite Oil Gauge	1
51	52942 Y	Looper Rocker Shaft Synchronizing Stud	1
52	22889 C	Adapter Plug Screw	2
53	22889 D	Adapter Plug Screw	1
54	666-114	Oil Wick	2
55	35178 D	Spring	4
56	22571 A	Plug Screw	15
57	666-65	Oil Wick	2
58	666-118	Oil Wick	2
59	666-111	Oil Wick	2
60	666-179	Wedge Pin	2
61	22539 H	Plug Screw	1
62	56390 E	Crankshaft Bearing Housing Gasket	1

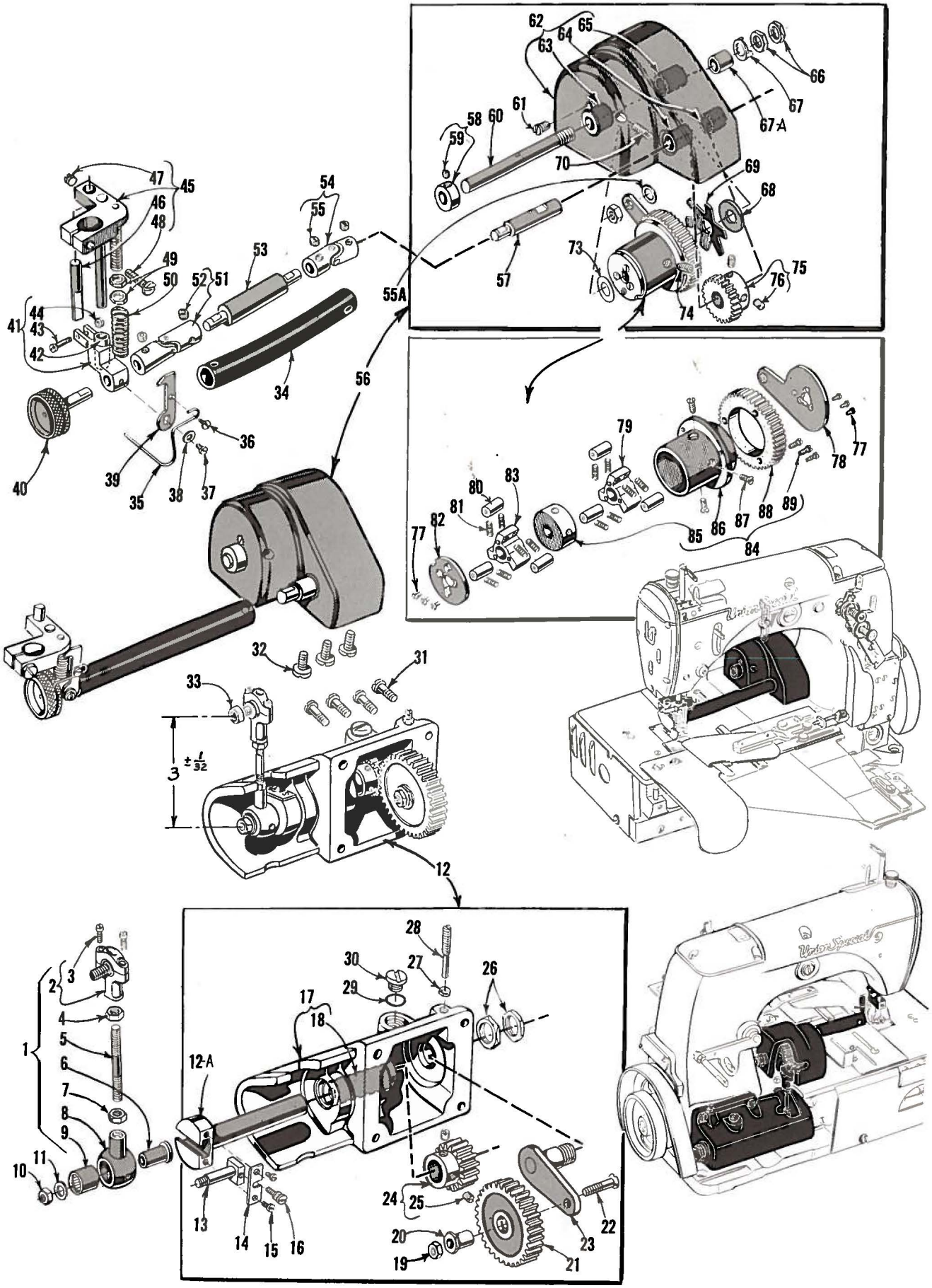

FOR STYLES 53100 B AND C ONLY

CLUTCH ASSEMBLY, CLUTCH DRIVE SHAFT GEAR AND HOUSING ASSEMBLY

Ref. No.	Part No.	Description	Amt. Req.
1	29476 JD	Clutch Drive Connecting Rod Assembly	1
2	53139 H	Clutch Drive Ball Joint	1
3	97 A	Screw	2
4	18	Nut	1
5	41331 G	Connecting Rod	1
6	51236 F	Ferrule	1
7	269	Nut	1
8	53139 K	Crank Strap	1
9	660-169	Needle Bearing	1
10	269	Nut	1
11	20	Washer	1
12	29476 JF	Clutch Drive Shaft Gear and Housing Assembly	1
12A	53139 B	Clutch Drive Shaft	1
13	51236 G	Feed Crank Stud	1
14	51236 B	Feed Crank Stud Cap	1
15	22768	Screw	2
16	82	Screw	1
17	53139	Clutch Drive Housing	1
18	53139 A	Bushing	1
19	269	Nut	1
20	53139 E	Idler Gear Eccentric Bushing	1
21	53139 D	Idler Gear	1
22	22888 A	Screw	1
23	53139 F	Idler Gear Bracket	1
24	53139 C	Clutch Drive Shaft Gear	1
25	98	Screw	2
26	39153 G	Nut	2
27	12982	Nut	1
28	22791 D	Pin	1
29	41394 A	Gasket	1
30	22733 B	Screw	1
31	22861 B	Screw	4
32	22548	Screw	3
33	258	Nut	1
34	53139 Z	Roller Feed Shaft Guard	1
35	53139 AC	Feed Roller Stripper	1
36	22561	Screw	1
37	22768	Screw	1
38	41358	Washer	1
39	53139 AB	Feed Roller Lifter	1
40	53139 AD	Feed Roller, fine knurl	1
	53139 AE	Feed Roller, fifty teeth	1
	53139 AH	Feed Roller, coarse knurl	1
41	51239 AA	Feed Roller Block	1
42	51239 AB	Bushing	1
43	22747 B	Screw	1
44	43443 Q	Nut	1
45	53139 AA	Roller Feed Mounting Bracket	1
46	50-799 Blk.	Guide	1
47	88	Screw	1
48	22874	Screw	1
49	12987 A	Nut	2
50	53139 AG	Plunger Spring	1
51	51239 G	Universal Joint	1
52	22894 T	Set Screw	2
53	61339 F	Roller Feed Shaft	1
54	660-239	Universal Joint	1
55	22580	Set Screw	2
55A	6042 A	Washer	1
56	29476 JE	Clutch Assembly	1
57	53139 Y	Roller Feed Driving Gear Shaft	1
58	460	Collar	1
59	88	Screw	1
60	53139 W	Clutch Shaft	1
61	22892 C	Stop Screw	1
62	53139 L	Clutch Housing	1
63	53139 N	Bushing	1
64	53139 P	Bushing	2
65	53139 M	Bushing	1
66	11638 M	Nut	2
67	54278 Y	Driving Washer	1
67A	54278 W	Sleeve	1
68	54274 P	Washer	1
69	54274 N	Tension Spring	1
70	719	Set Screw	1
73	61351 C	Washer	1
74	22894 H	Spot Screw	1
75	53139 X	Roller Feed Gear	1
76	22651 CB-4	Set Screw	2
77	605	Screw	6
78	53139 R	Drive Lever	1
79	54274 H	Clutch Disc	1
80	54274 L	Clutch Roller	6
81	54274 M	Clutch Spring	12
82	54274 J	Support Plate	1
83	54274 HA	Clutch Disc	1
84	53139 S	Clutch Barrel Assembly	1
85	53139 V	Core	1
86	53139 U	Barrel	1
87	538	Screw	3
88	53139 T	Clutch Barrel Gear	1
89	22593	Screw	3

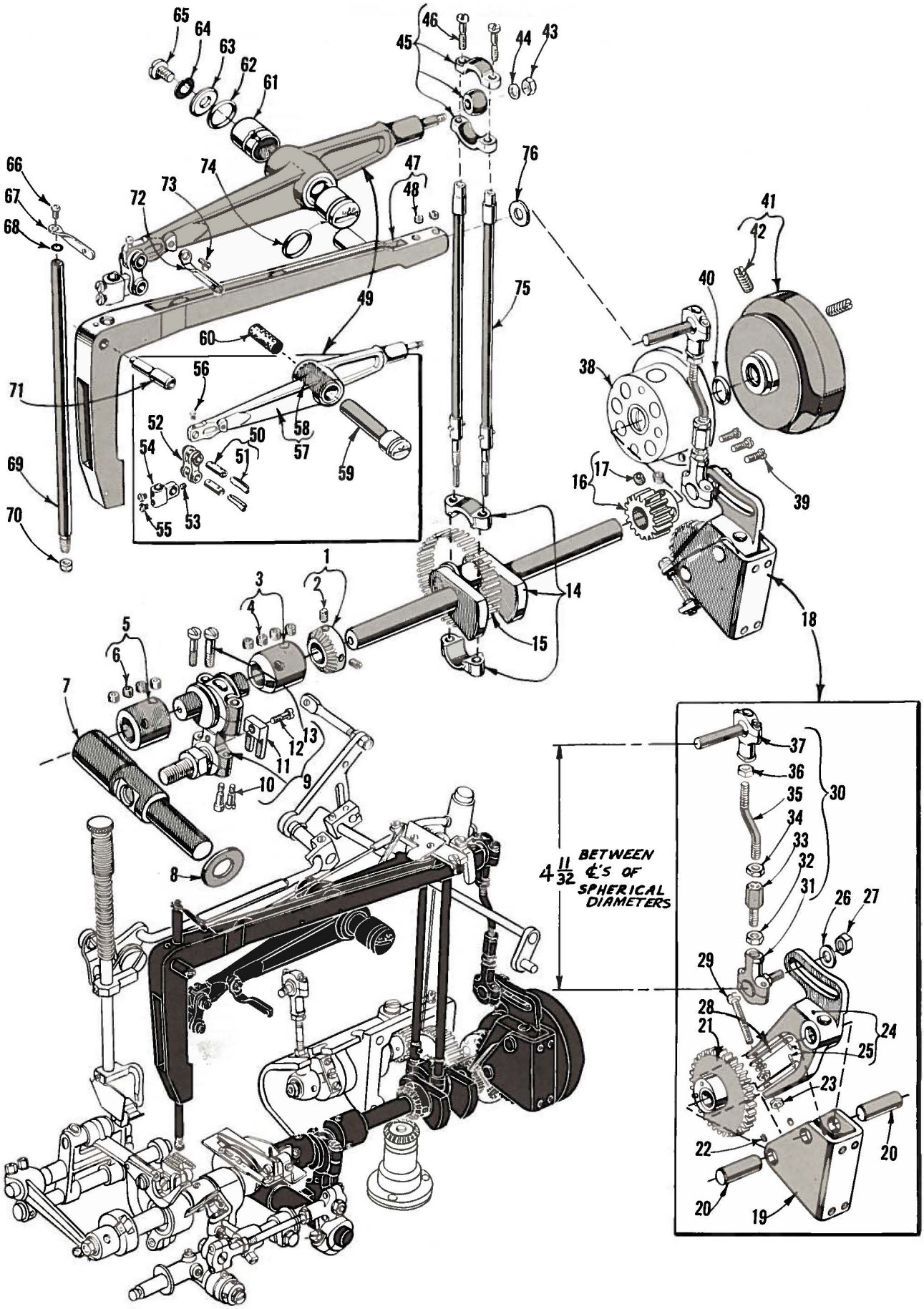

CRANKSHAFT, NEEDLE LEVER AND LOOPER DRIVING PARTS

Ref. No.	Part No.	Description	Amt. Req.
1	51493 BP	Pump Driving Gear	1
2	22560 B	Screw	2
3	52943 L	Collar	1
4	22894 X	Screw	4
5	52943 K	Collar	1
6	22894 X	Screw	4
7	52942 A	Looper Drive Lever Rocker Shaft	1
8	52951 C	Washer	1
9	29476 LE	Looper Driving Lever Crank Assembly	1
10	22559 A	Screw, lower	2
11	51243 C	Ball Stud Guide	1
12	22729	Screw	1
13	22587	Screw, upper	2
14	29476 HL	Crankshaft Assembly, .910 inch throw	1
15	51216 M	Needle Bearing	28
16	53138 L	Cam Driving Gear	1
17	22894 X	Screw	2
18	29476 JZ	Cam Gear, Cam Gear Fork and Needle Bar Frame Connecting Rod Assembly	1
19	53138 E	Cam Gear Fork Frame	1
20	53138 F	Cam Gear Fork Shaft	2
21	53138 J	Cam Gear	1
22	22733	Screw	2
23	12934 A	Nut	3
24	53138 C	Cam Gear Fork and Adjusting Segment	1
25	50-774 Blk.	Pin	2
26	21657 E	Washer	1
27	18	Nut	1
28	53138 D-0420	Cam Gear Fork Wear Plate, .042 inch thick	2
	53138 D-0425	Cam Gear Fork Wear Plate, .0425 inch thick	2
	53138 D-0430	Cam Gear Fork Wear Plate, .043 inch thick	2
29	22874 F	Screw	1
30	53137 E	Needle Bar Frame Connecting Rod Assembly	1
31	53137 J	Ball Joint, lower	1
32	18	Nut	2
33	22841 H	Adjusting Screw	1
34	269	Nut	1
35	53137 H	Connecting Rod	1
36	18	Nut	1
37	53137 F	Ball Joint, upper	1
38	52891 B	Crankshaft Bushing Housing, including bushing	1
39	22569 B	Screw	3
40	660-202	"O" Ring, for pulley	1
41	52921 B	Pulley	1
42	22894 G	Screw	2
43	51216 P	Nut	1
44	51216 N	Washer	1
45	29066 R	Needle Lever Connecting Rod and Upper Bearing Assembly	1
46	22559 G	Screw	2
47	53137	Needle Bar Frame	1
48	22894 T	Screw	2
49	29348 T	Needle Lever Assembly	1
50	51054	Feed Crank Pin	2
51	666-149	Lubricating Felt	1
52	54	Needle Bar Link	1
53	78	Screw	1
54	35759	Needle Bar Connection	1
55	88 A	Screw	2
56	77	Screw	1
57	53115	Needle Lever	1
58	51250 A	Bushing	1
59	51250 E	Needle Lever Stud	1
60	666-170	Wick	1
61	51150	Needle Lever Shaft Stop Collar	1
62	660-212	Oil Seal Ring	1
63	51250 D	Washer	1
64	51250 F	Gasket	1
65	22586 R	Screw	1
66	22768	Screw	1
67	51258 A	Needle Bar Thread Eyelet	1
68	27-435 Blk.	Needle Bar Eyelet Washer	1
69	53117 A	Needle Bar	1
70	56	Needle Clamp Nut	1
71	53137 M	Needle Bar Frame Pivot Pin	1
72	51258	Needle Lever Thread Eyelet	1
73	22768	Screw	1
74	660-212	Oil Seal Ring	2
75	51216 G	Needle Lever Connecting Rod	2
76	15444 F	Washer, redwood	1

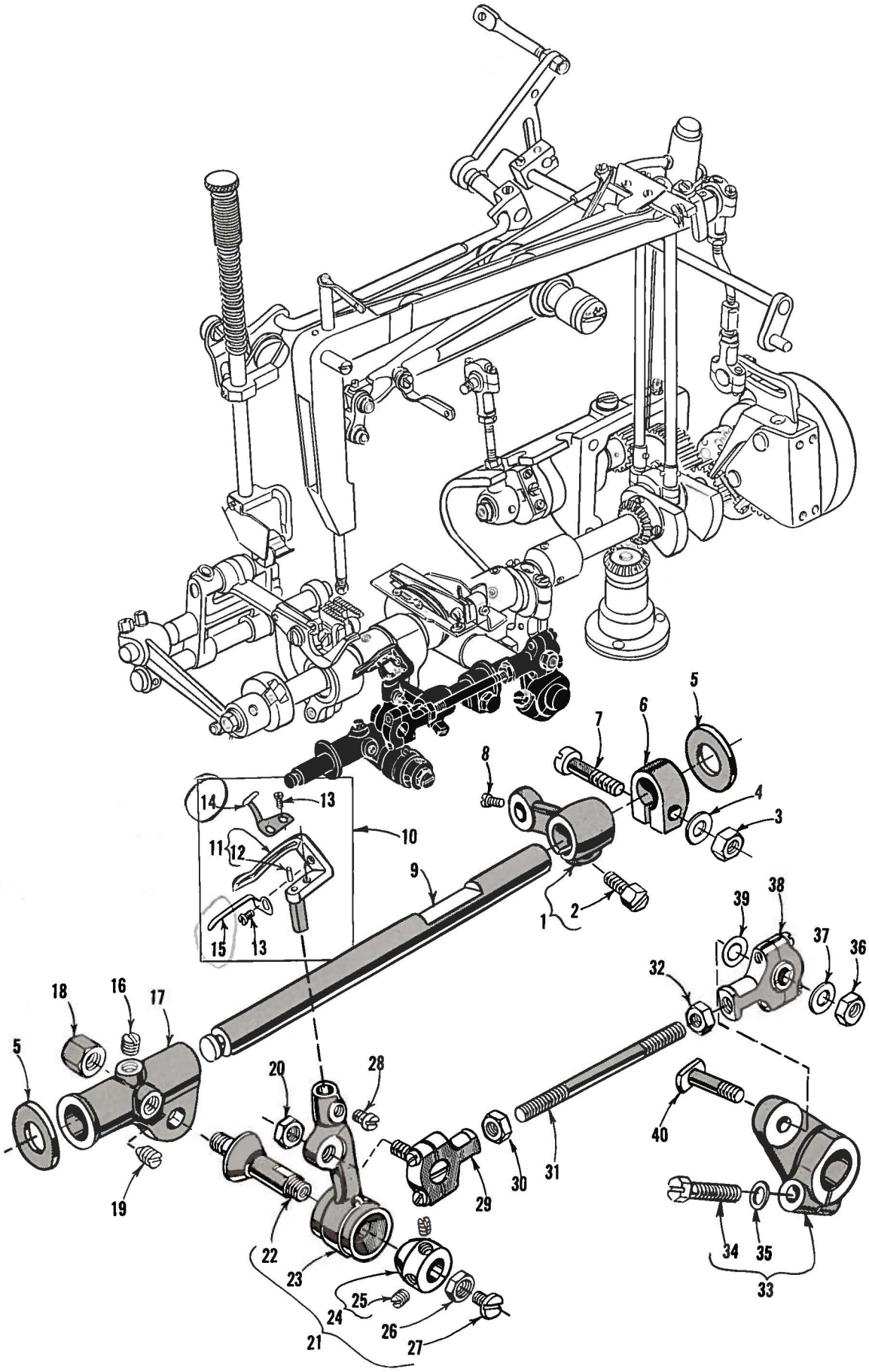

LOOPER ROCKER AND CONNECTING ROD PARTS

Ref. No.	Part No.	Description	Amt. Req.
1	51244 B	Looper Rocker Shaft Arm	1
2	22519 H	Screw	1
3	18	Nut	1
4	51216 N	Washer	1
5	51244 L	Thrust Washer	2
6	51244 N	Looper Rocker Frame Clamp Collar	1
7	55244 G	Looper Rocker Shaft Collar Stud	1
8	77	Screw	1
9	51144	Looper Rocker Shaft	1
10	53108 C	Looper Assembly	1
11	53108 B	Looper	1
12	1740	Pin	1
13	22738 B	Screw	2
14	53111 A	Looper Retainer, front	1
15	53111	Looper Retainer, bottom	1
16	98	Screw	1
17	51244	Looper Rocker Frame	1
18	51246	Looper Rocker Stud Nut	1
19	96	Screw	1
20	18	Nut	1
21	29192	Looper Rocker Assembly	1
22	51745	Looper Rocker Cone Stud	1
23	51213	Looper Rocker	1
24	15465 F	Looper Rocker Cone	1
25	88	Screw	2
26	258 A	Nut	1
27	22829	Screw	1
28	73	Screw	1
29	55241 N	Looper Connecting Rod Ball Joint, left	1
30	269	Nut	1
31	39141	Looper Connecting Rod	1
32	18	Nut	1
33	52942 P	Looper Drive Lever	1
34	22882 A	Screw	1
35	51242 M	Washer	1
36	18	Nut	1
37	20	Washer	1
38	52941 D	Looper Connecting Rod Ball Joint, right	1
39	41355 U-4	Shim, .004 inch thick (as required)	
	41355 U-5	Shim, .005 inch thick (as required)	
	41355 U-6	Shim, .006 inch thick (as required)	
	41355 U-7	Shim, .007 inch thick (as required)	
	41355 U-8	Shim, .008 inch thick (as required)	
	41355 U-9	Shim, .009 inch thick (as required)	
40	52942 R	Looper Lever Stud	1

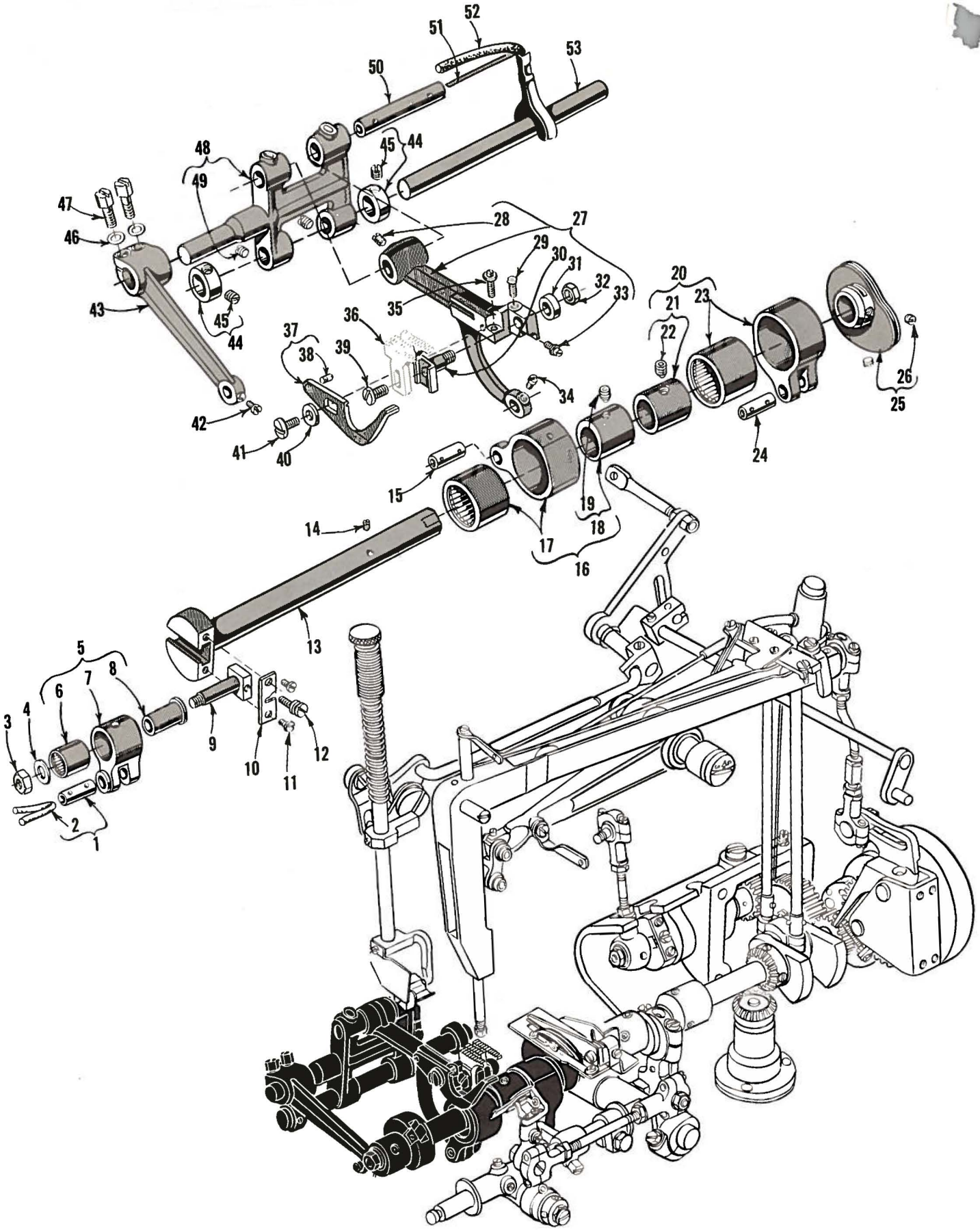

MAIN SHAFT AND FEED MECHANISM

Ref. No.	Part No.	Description	Amt. Req.
1	51054	Link Pin	1
2	666-149	Oil Wick	1
3	269	Nut	1
4	20	Washer	1
5	51236 E	Feed Crank Link Assembly	1
6	660-169	Needle Bearing	1
7	51236 D	Feed Crank Link	1
8	51236 F	Feed Crank Link Ferrule	1
9	51236 G	Feed Crank Stud	1
10	51236 B	Feed Crank Stud Cap	1
11	22768	Screw	2
12	82	Screw	1
13	52922 C	Main Shaft, for Styles 53100 A, B, C, D	1
14	22801	Screw	1
15	51236 A	Link Pin	1
16	29476 DR	Feed Lift Eccentric Assembly, for Styles 53100 A, B, C, D	1
17	51145 A	Eccentric Bearing	1
18	51142 C	Eccentric, .080 inch throw	1
19	22894 D	Screw	1
20	29476 DX	Looper Avoid Eccentric Assembly	1
21	51306	Eccentric, .072 inch throw	1
22	22894 D	Screw	1
23	51145 A	Eccentric Bearing	1
24	51236 A	Link Pin	1
25	52923 D	Take-Up	1
26	22580 D	Screw	2
27	51134	Feed Bar, for Styles 53100 A, B, C, D	1
28	22560 B	Screw	1
29	538	Feed Dog Height Adjusting Screw	1
30	51134 H	Feed Dog Holder	1
31	51134 J	Feed Dog Holder Washer	1
32	258 A	Nut	1
33	22863	Feed Dog Holder Adjusting Screw	1
34	77	Screw	1
35	22834	Needle Guard Adjusting Screw, for Styles 53100 A, B, C, D	1
36		Feed Dog (See Page 37)	1
37	53125	Needle Guard, for Styles 53100 A, B, C, D	1
38	22801	Stud Screw	1
39	22528	Screw, for feed dog on Styles 53100 A, B, C, D	1
40	51225 W	Washer, for needle guard on Styles 53100 A, B, C, D	1
41	22585 B	Screw, for needle guard on Styles 53100 A, B, C, D	1
42	77	Screw	1
43	51235 A	Feed Rocker Arm, for Styles 53100 A, B, C, D	1
44	482	Collar	2
45	98	Screw	1
46	51235 G	Washer	2
47	22519 C	Screw	2
48	51235	Feed Rocker, for Styles 53100 A, B, C, D	1
49	98	Screw	2
50	51134 C	Feed Bar Shaft	1
51	51134 R	Lubricating Felt Guard, for Styles 53100 A, B, C, D	1
52	51134 P	Lubricating Felt, for Styles 53100 A, B, C, D	1
53	8	Feed Rocker Shaft	1

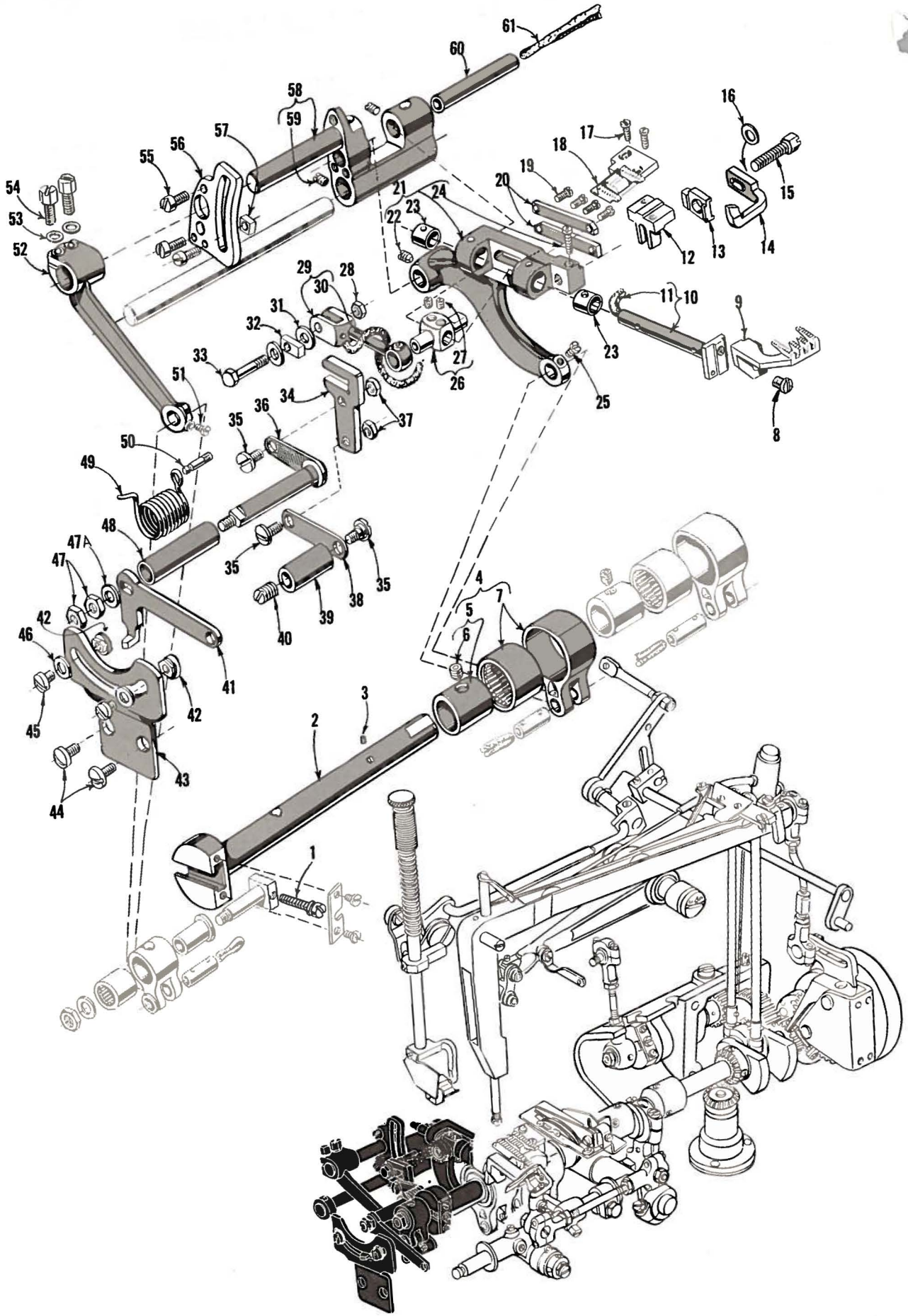

FOR STYLE 53100 E ONLY

MAIN SHAFT AND FEED MECHANISM

Ref. No.	Part No.	Description	Amt. Req.
1	82	Screw	1
2	52822 B	Main Shaft	1
3	22801	Screw	1
4	29476 DV	Feed Lift Eccentric Assembly	1
5	51406	Feed Lift Eccentric, .062 inch throw	1
6	22894 D	Screw	1
7	51145 A	Eccentric Bearing	1
8	90	Screw	1
9	3026 A	Differential Feed Dog (Also see Page 37)	1
10	52834 H	Differential Feed Bar	1
11	CL21	Oil Wick	1
12	52853	Main Feed Dog Holder	1
13	52925 D	Needle Guard Holder	1
14	53125 A	Needle Guard	1
15	22519 J	Screw	1
16	51235 G	Washer	1
17	22593	Screw	2
18	52805 D-16	Main Feed Dog (Also see Page 37)	1
19	22593	Screw	4
20	39237 D	Differential Feed Bar Guide Plate	2
21	52834	Main Feed Bar	1
22	22560 B	Screw	1
23	39237 G	Bushing	2
24	22747	Feed Dog Height Adjusting Screw	1
25	77	Screw	1
26	39237	Differential Feed Bar Guide	1
27	22565 C	Screw	2
28	907	Nut	1
29	52835 V	Differential Feed Bar Driving Link	1
30	CL21	Oil Wick	1
31	39236 A	Washer	2
32	52835 S	Differential Feed Fork Block	1
33	22868 A	Screw	1
34	52835 Q	Differential Feed Fork	1
35	22758 B	Screw	3
36	51435	Differential Feed Control Lever, rear	1
37	12934 A	Nut	2
38	52835 G	Control Lever Link	1
39	52835 U	Pivot Stud Insert	1
40	719	Screw	1
41	52835	Differential Feed Control Lever	1
42	43139 A	Indicator Stop	2
43	52835 N	Control Lever Stop Plate	1
44	22848	Screw	2
45	25 CC	Screw	2
46	8372 A	Indicator Stop Washer	2
47	9937	Nut	2
47A	20	Washer	1
48	51435 B	Differential Feed Control Lever Bushing	1
49	52835 K	Control Lever Spring	1
50	61267 G	Lifter Lever Spring Pin	1
51	77	Screw	1
52	52836 C	Feed Rocker Arm	1
53	51235 G	Washer	2
54	22519 C	Screw	2
55	22516	Screw	3
56	52836 H	Feed Rocker Segment Plate	1
57	39236	Differential Feed Bar Driving Link Slide Block	1
58	52836	Feed Rocker	1
59	89	Screw	2
60	51134 C	Feed Bar Shaft	1
61		Wool Yarn	1

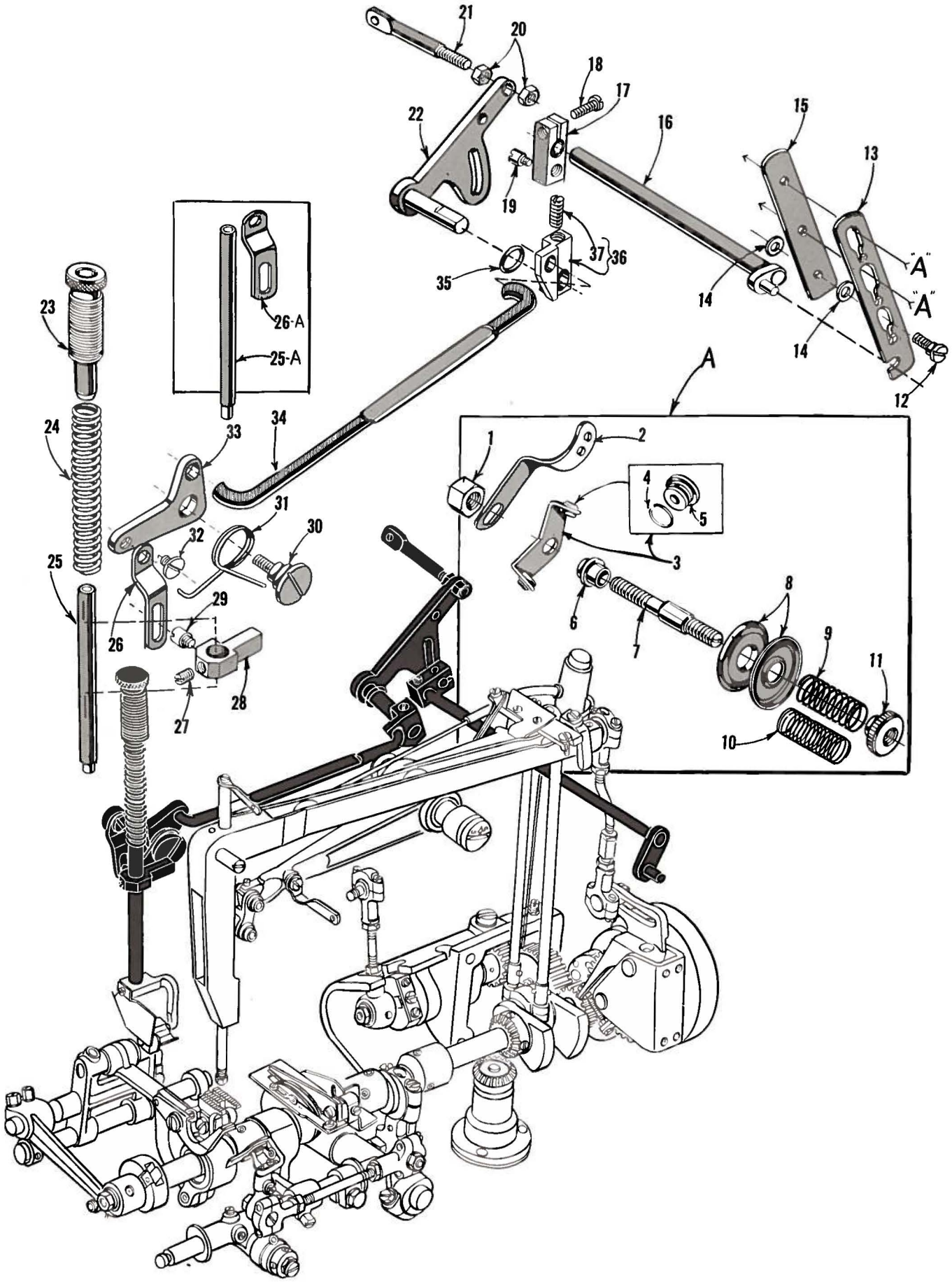

THREAD TENSION AND FOOT LIFTER LEVER PARTS

Ref. No.	Part No.	Description	Amt. Req.
1	43266	Nut	1
2	51491 C	Lead-in Thread Eyelet	2
3	51292 D	Tension Thread Eyelet	2
4	668-25	Eyelet	2
5	668-28	Eyelet Locking Ring	2
6	51292 A	Tension Post Ferrule	2
7	51292 G	Tension Post	2
8	109	Tension Disc	4
9	51292 F-8	Tension Spring (needle)	1
10	51292 F-2	Tension Spring (looper)	1
11	51292 C	Tension Nut	2
12	22598 C	Tension Release Stud	1
13	21657-3	Tension Disc Separator	1
14	80557	Washer	2
15	52892	Tension Post Support	1
16	21657 W	Tension Release Lever Shaft	1
17	21657 Y	Tension Release Lever Connection	1
18	22596	Screw	1
19	402	Screw	1
20	258	Nut, for Styles 53100 B, C	2
21	35780 B	Lifter Lever Extension, for Styles 53100 B, C	1
22	51283 H	Presser Foot Lifter Lever	1
23	51256 N	Presser Spring Regulator	1
24	51256 C	Presser Bar Spring	1
25	53157	Presser Bar, for Styles 53100 B, C	1
25A	51257 K	Presser Bar, for Styles 53100 A, D, E	1
26	53183 A	Presser Foot Lifter Lever Link, for Styles 53100 B, C	1
26A	53783 A	Presser Foot Lifter Lever Link, for Styles 53100 A, D, E	1
27	531	Screw	1
28	51257 M	Presser Bar Connection and Guide	1
29	402	Screw	1
30	22557 B	Screw	1
31	52883 S	Presser Foot Lifter Lever Bell Crank Spring	1
32	22758 C	Screw	1
33	53783 L	Presser Foot Lifter Lever Bell Crank	1
34	53783 M	Presser Foot Lifter Lever Connecting Rod	1
35	660-207	Oil Seal Ring	1
36	53783 N	Presser Foot Lifter Lever, internal	1
37	22537	Screw	1

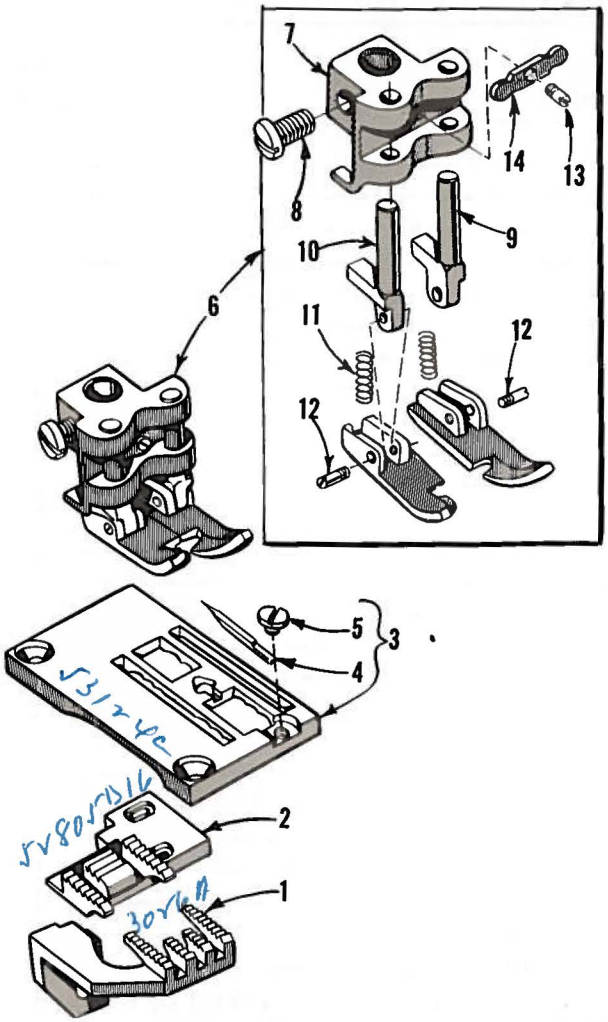

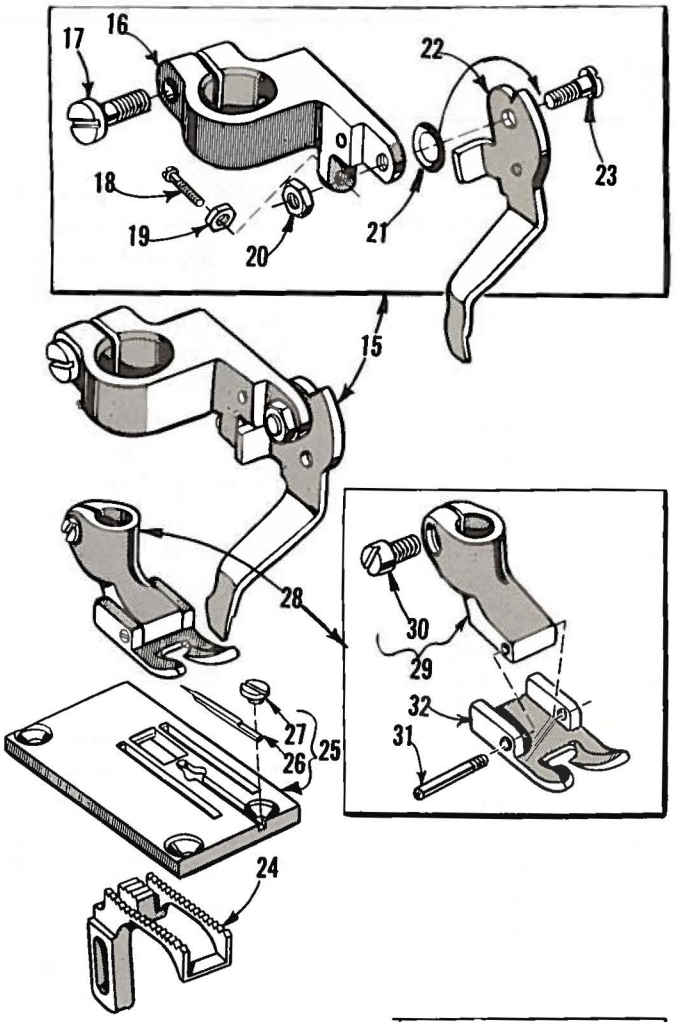

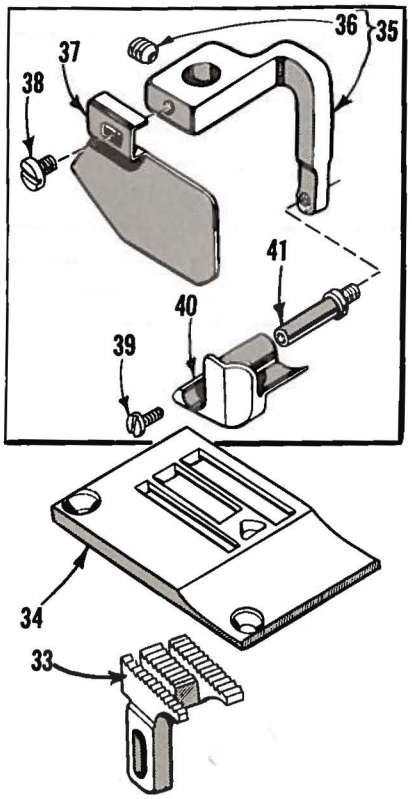

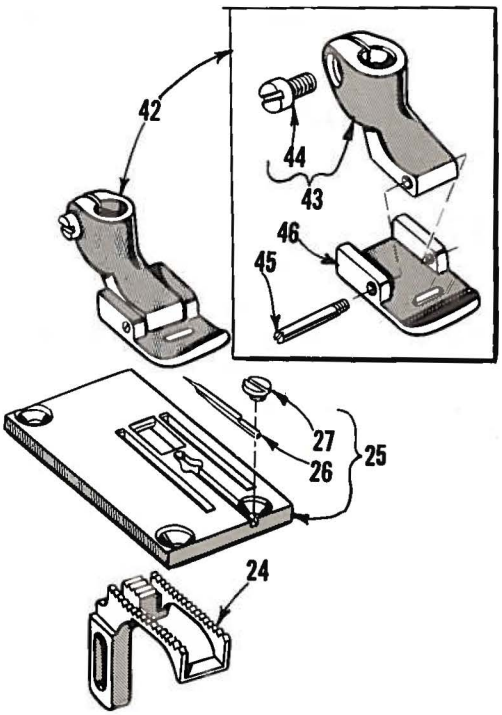

FEED DOGS, THROAT PLATES AND PRESSER FEET

Ref. No.	Part No.	Description	Amt. Req.
1	3026 A	Differential Feed Dog, for Style 53100 E	1
2	52805 D-16	Main Feed Dog, for Style 53100 E	1
3	53124 C	Throat Plate, for Style 53100 E	1
4	53131 C	Stitch Tongue	1
5	187 B	Screw	1
6	53120 D	Presser Foot, for Style 53100 E	1
7	51230 U	Presser Foot Shank	1
8	22570 A	Screw	1
9	61130 D	Presser Foot Plunger, right	1
10	61130 E	Presser Foot Plunger, left	1
11	6990	Spring	2
12	22799 U	Hinge Screw	2
13	22799 N	Screw	1
14	61130 F	Equalizer	1
15	23441 F	Edge Guide Assembly, for Styles 53100 D, E	1
16	23441 H	Edge Guide Bracket	1
17	22596	Screw	1
18	22738 D	Screw	1
19	60078 Z	Nut	1
20	41071 G	Nut	1
21	35772 H	Spring Washer	1
22	23441 G	Edge Guide	1
23	22585	Screw	1
24	53105 A	Feed Dog, for Styles 53100 A, D	1
25	53124 A	Throat Plate, for Styles 53100 A, D	1
26	53131 C	Stitch Tongue	1
27	187 B	Screw	1
28	53120 B	Presser Foot, for Style 53100 D	1
29	53130 A	Presser Foot Shank	1
30	91	Screw	1
31	22799 B	Hinge Screw	1
32	53130 E	Presser Foot Bottom	1
33	53105 B	Feed Dog, for Styles 53100 B, C	1
34	53124 B	Throat Plate, for Styles 53100 B, C	1
35	53130 C	Presser Foot Shank, for Styles 53100 B, C	1
36	22894 W	Screw	1
37	53139 AF	Cloth Guard, for Styles 53100 B, C	1
38	28	Screw	1
39	22798 A	Screw	1
40	53130 B	Presser Foot Bottom, for Styles 53100 B, C	1
41	53130 D	Presser Foot Hinge Pin Stud, for Styles 53100 B, C	1
42	53120 C	Presser Foot, for Style 53100 A	1
43	53130 A	Presser Foot Shank	1
44	91	Screw	1
45	22799 B	Hinge Screw	1
46	53130 F	Presser Foot Bottom	1

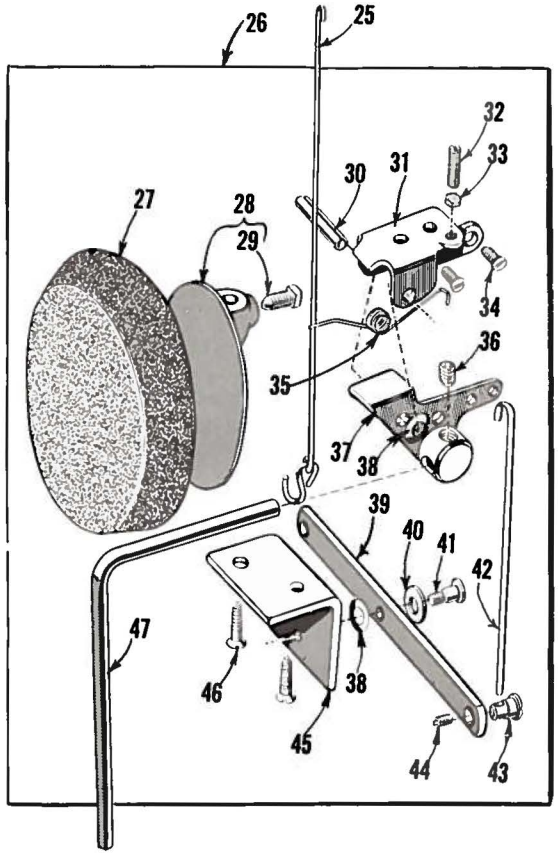

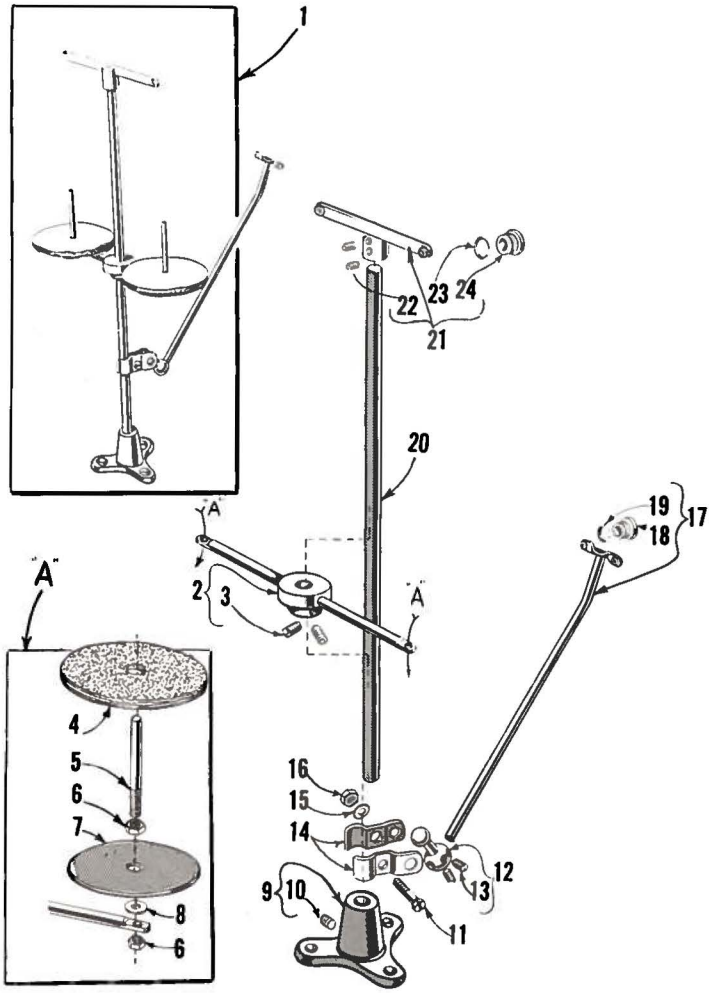

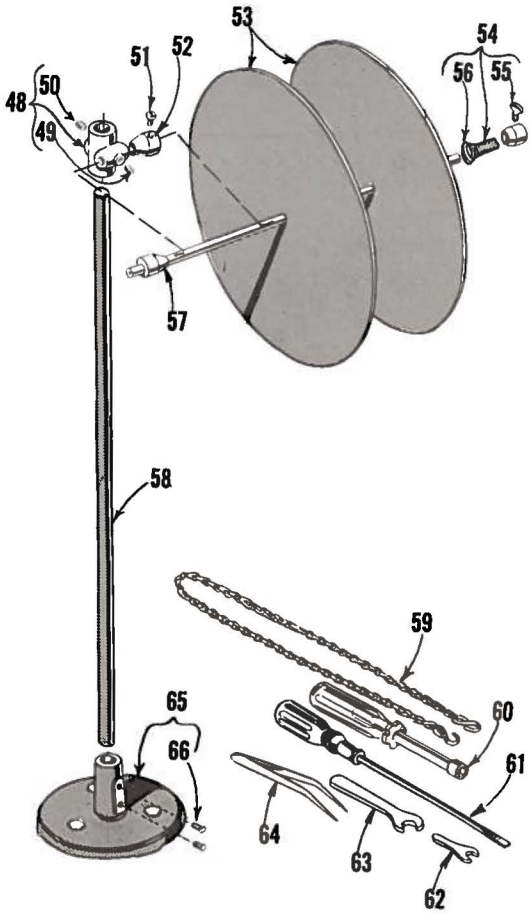

THREAD STAND, KNEE PRESS AND TAPE REEL PARTS

Ref. No.	Part No.	Description	Amt. Req.
1	21101 H-2	Thread Stand, complete	1
2	21114 D-2	Spool Seat Support	1
3	22651 CD-5	Screw	2
4	21104 V	Pad	2
5	21114 W	Spool Pin	2
6	258 A	Nut	4
7	21114	Spool Seat Disc	2
8	652-16	Washer	2
9	21114 A	Thread Stand Base	1
10	22651 CD-3	Screw	1
11	22810	Screw	1
12	21114 T	Lead Eyelet Socket Ball	1
13	22651 CD-4	Screw	2
14	21114 U	Lead Eyelet Ball Split Socket	2
15	652-16	Washer	1
16	21104 H	Nut	1
17	21114 S-2	Lead Eyelet	1
18	21114 L	Eyelet	2
19	21114 M	Eyelet Locking Ring	2
20	21104 B-24	Thread Stand Rod, 24 inches long	1
21	21114 H-2	Eyelet Support	1
22	22651 CD-4	Screw	2
23	21114 M	Eyelet Locking Ring	2
24	21114 L	Eyelet	2
25	51493 BC	Lifter Link	1
26	21660 H	Knee Press Assembly, for Styles 53100 A, D, E	1
27	660-168	Knee Press Plate Cushion	1
28	21664	Knee Press Plate	1
29	69 FD	Screw	1
30	660-219 G	Roll Pin	1
31	21664 F	Mounting Bracket	1
32	92201	Screw	1
33	12982	Nut	1
34	80	Screw	2
35	21662 V	Torsion Spring	1
36	22650 CE-6	Screw	1
37	21662 R	Knee Press Lifter Arm	1
38	39536 AD	Spring Washer	2
39	21662 U	Knee Press Lever	1
40	43137 E	Washer	1
41	22557 A	Screw	1
42	21662 T	Knee Press Link	1
43	21662 S	Knee Press Link Connection	1
44	22894 Z	Screw	1
45	21664 C	Bracket	1
46		Wood Screw (#12 x 1 inch)	2
47	21663 A	Knee Press Plate Lever	1
48	21217 A	Tape Reel Axle Support, for Styles 53100 B, C	1
49	22650 CB-4	Screw	1
50	22651 CD-4	Screw	1
51	93 A	Screw, for Styles 53100 B, C	1
52	753	Tape Reel Disc Collar, for Styles 53100 B, C	1
53	21178 A	Tape Reel Disc, for Styles 53100 B, C	2
54	21177 A	Tape Reel Spring Collar, for Styles 53100 B, C	1
55	22647 K-24	Thumb Screw	1
56	1349 A-5	Tension Spring	1
57	21218	Tape Reel Axle, for Styles 53100 B, C	1
58	21104 B-20	Tape Reel Rod, 20 inches long, for Styles 53100 B, C	1
59	421 D-28	Treadle Chain, 28 inches long, for presser foot on Styles 53100 B, C	1
	421 D-38	Treadle Chain, 38 inches long, for differential feed on Style 53100 E	1
60	21388 AU	Wrench, for 3/8 inch hexagonal nut	1
61	21202	Screw Driver, 3/16 inch round blade, over-all length 9 3/8 inches	1
62	116	Wrench, for 9/32 inch nut	1
63	21388	Wrench, single end, for 3/8 inch nut	1
64	118 B	Thread Tweezer	1
65	21102 D	Tape Reel Base, for Styles 53100 B, C	1
66	22632 F-24	Screw	2

NUMERICAL INDEX OF PARTS

NOTE: Only the basic part numbers are shown in the index. For various gauges, capacities, etc. available, refer to the listings on pages indicated.

NUMERICAL INDEX OF PARTS

NOTE: Only the basic part numbers are shown in the index. For various gauges, capacities, etc. available, refer to the listings on pages indicated.

FINEST QUALITY

Union Special®

LEWIS and COLUMBIA

INDUSTRIAL SEWING MACHINES

DEPENDABLE SERVICE
WORLD'S FINEST QUALITY ★
SINCE 1881

SALES OFFICES AND REPRESENTATIVES

†Handle Union Special and Columbia only.
‡Handle Lewis and Columbia only.
All others handle Union Special, Lewis and Columbia with certain exceptions.

UNITED STATES

ALABAMA, BIRMINGHAM, 732-84th Street, South, Lloyd D. Baldwin, Tel. 833-9904.

ALABAMA, MONTGOMERY 7, 1959 Amelia Drive, Garnet H. Hamlet, Tel. 265-0942, P.O. Box 7203, Larry Crisler, Tel. 265-0942.

ARKANSAS, LITTLE ROCK, P.O. Box 1783, James T. Taylor, Tel. (501) FR 2-2356.

CALIFORNIA, LA PUENTE, 1527 Channelwood Drive, Bill Bayless, Tel. 330-3043.

★CALIFORNIA, LOS ANGELES 21, 1100 E. Pico Blvd., Paul M. Mason, Mgr., Tel. Madison 5-5828.

CALIFORNIA, SAN FRANCISCO 7, 1275 Mission St., Robert J. Vail, Tel. Underhill 1-1580.

‡CALIFORNIA, SAN FRANCISCO 3, Apparel City Sewing Machine Co., 1155 Mission St., Tel. MArket 1-6660.

COLORADO, ARVADA, Casey's Sewing Machine Service, 5719 Reed St., Tel. 424-6630.

CONNECTICUT, DANBURY, 22 Barnum Road, Robert W. Gaines, Tel. 746-3652.

FLORIDA, MIAMI, 2519 N.W. 2nd Ave., Trimco Sewing Equipment, Inc., Tel. 633-1138.

FLORIDA, PLANT CITY, 506 N. Gordon St., James C. Morgan, Tel. 752-1829.

★GEORGIA, ATLANTA, 2120 Plasters Bridge Road, N.E., Merritt M. Ambrose, Mgr., Tel. 875-9237.

GEORGIA, COMMERCE, Lakeview Drive, J. Tom Hanley, Tel. 335-4061.

GEORGIA, DECATUR, 1713 Coventry Road, Joe V. Parker, Tel. 377-5559.

GEORGIA, DUBLIN, 1615 Knox St., John W. Jones, Tel. 272-4663.

GEORGIA, GAINESVILLE, RFD #1, John Bradberry, Tel. Cumming, Ga. 887-4732.

GEORGIA, WINDER, 805 Pinkney, B. D. Smith, Tel. 867-3708.

★ILLINOIS, CHICAGO 10, 400 N. Franklin St., Orville A. Ullrick, Mgr., Tel. 644-6920.

KANSAS, PRAIRIE VILLAGE, 7351 Rosewood, Cleo C. Smith, Tel. HE 2-1705.

KENTUCKY, LOUISVILLE 7, P.O. Box 7261, Raymond E. Hinton, Tel. 587-0042.

LOUISIANA, METAIRIE, 707 Trudeau Drive, Charles Wickersham, Tel. 729-4115.

MARYLAND, BALTIMORE 15, P.O. Box 2505, Ralph B. Foster, Tel. 727-8499.

‡MARYLAND, BALTIMORE 1, J. Dashew, Inc., 417 W Baltimore St., Tel. LExington 9-1838.

†★MASSACHUSETTS, BOSTON 11, 179 Lincoln St., William E. Palm, Mgr., Tel. Liberty 2-0147.

†MASSACHUSETTS, CANTON, York St., RFD, Roy T. Pedersen, Tel. 828-1412.

†MASSACHUSETTS, TAUNTON, P.O. Box #2 Raynham, Walter P. Godek, Tel. VanDyke 2-6149.

MICHIGAN, DETROIT, John Joyce, Tel. 584-4210.

MINNESOTA, MINNEAPOLIS, 2800 Texas Ave., St. Louis Park 26, Minn., Leonard W. Koehler, Tel. 644-6236.

MISSISSIPPI, JACKSON 3, 327 Eastview St., Jamie A. Boyette, Tel. FLeetwood 5-1976, 1717 Capitol Ave., Larry Lancaster, Tel. 354-3080.

MISSISSIPPI, TUPELO, 606 Racove Drive, Bill Haywood, Tel. VI 2-5848.

‡MISSOURI, KANSAS CITY 5, Textile Machinery Co., 915 Broadway, Tel. Victor 2-9558.

MISSOURI, ST. LOUIS 34, 9860 Guthrie Ave., Carl E. McLaughlin, Tel. Chestnut 1-2368, 3940 Shenandoah St., Jerry Hicks.

†NEW HAMPSHIRE, NASHUA, P.O. Box 257, Herman E. Haberman Jr., Tel. Tuxedo 2-9698.

†NEW JERSEY, NORTH ARLINGTON, 32M Garden Terrace, Joseph Loglisci, Tel. 991-8211.

†NEW JERSEY, RUTHERFORD, 246 Sylvan St., Richard W. Whitson, Tel. Geneva 8-2178.

NEW JERSEY, WEST BERLIN, P.O. Box 26, Frank A. Neff, Tel. 767-4350.

NEW YORK, LATHAM, 57 Sylvan Ave., Clarence A. Wheeler, Tel. State 5-6371.

★NEW YORK, NEW YORK 1, 370 7th Ave., (Penn Terminal Bldg.), Clarence L. Rosenquist, Mgr., Tel. Chickering 4-8800.

NEW YORK, ROCHESTER, 14 Strathmore Circle, James Halbohm, Tel. LI 4-1882.

‡NEW YORK, ROCHESTER 9, A. J. Adams Co., 1051 Culver Rd., Tel. BUtler 8-7250.

NEW YORK, UNIONDALE, 873 Henry St., Anthony Candell, Tel. Ivanhoe 3-7477.

NORTH CAROLINA, GREENSBORO, P.O. Box 226, William D. Harrod, Tel. 299-9367. 4216 Pennydale Dr., Harold E. Miller, Tel. 292-0734.

OHIO, CLEVELAND, 4914 Pearl Road, Cut & Sew Equipment Co., Tel. 661-5901.

OHIO, COLUMBUS, P.O. Box 874, Larry Kelsen, Tel. AXminister 1-1222.

OKLAHOMA, OKLAHOMA CITY 19, 2226 Southwest 53rd St., G. B. Wiley, Tel. 685-2836.

PENNSYLVANIA, ALLENTOWN, P.O. Box 542, Luther D Cassell, Tel. 797-2111.

PENNSYLVANIA, BETHLEHEM, 1212 Camac St., Ed Deegan, Tel. 868-8204.

PENNSYLVANIA, BERWICK, 1013 E. 16th St., Donald McFadden, Tel. 752-2442.

PENNSYLVANIA, CLARKS SUMMIT, 428 West Grove Ave., John J. Lafler, Tel. JUniper 7-2820.

★PENNSYLVANIA, PHILADELPHIA 24, 4234 Macalester Ave., Ben W. Merz, Mgr., Tel. Gladstone 5-9800.

†PENNSYLVANIA, NEW ALEXANDRIA, (Pittsburgh) P.O. Box 285. W. Dale Speer, Tel. (Pittsburgh) 563-3589.

PENNSYLVANIA, REAMSTOWN, P.O. Box 176, David M. Bender, Tel. 267-6109.

PENNSYLVANIA, YORK, P.O. Box 884, Harding T. Powell, 854-8040, also A. C. Davis.

SOUTH CAROLINA, COLUMBIA, P.O. Box 4246, Virlyn R. Crisler, Tel. Sunset 7-0863, P.O. Box 4112, J. W. Carter, Tel. 254-4255.

SOUTH CAROLINA, GREENVILLE, 25 Sir Abbot St., Orville W. Gregory, Tel. Cedar 9-5539, Lewis Village, Apt 9-E, John Lawrence, Tel. 235-2213.

TENNESSEE, KNOXVILLE 19, 3905 Greenleaf Ave., Horace E. Clinard, Tel. 588-1865.

TENNESSEE, MEMPHIS 17, 4695 Dunn Rd., Richard J. Lindhorst, Tel. Mutual 5-6750.

TENNESSEE, NASHVILLE 12, 1602 South Observatory Drive, William J. Brauch, Tel. Cypress 2-5123. 2517 Woodberry Drive, F. M. Blunkall, Tel. 883-3352.

★TEXAS, DALLAS 19, 4200 Hines Blvd., P.O. Box 6727 J. H. Muir, Mgr., Tel. Lakeside 6-8369.

TEXAS, CARROLLTON, 1404 Fannidella, John D. Troeger, Tel. CH 2-5309.

TEXAS, EL PASO, P.O. Box 9573, Edward E. Smith, Tel. 598-2928.

TEXAS, SAN ANTONIO, Jerry Gregory, P.O. Box 13126, Tel. DI 2-5924.

UTAH, SALT LAKE CITY, 1215 E. 13th South St., Larry F. Rasvall, Tel. IN 7-6931.

VIRGINIA, LYNCHBURG, P.O. Box 1075, Tom Traylor, Tel. 845-8901, also Gerald Morrison.

WASHINGTON, SEATTLE, 858 South 148th, Louis Spencer, Tel. MA 4-8083.

CANADA

Union Special Machine Co. of Canada, Ltd.

BRITISH COLUMBIA, N. BURNABY 2, James Murray, 1522 Madison Ave., Tel. MU 3-3917.

MANITOBA, WINNIPEG 2, Frank Thierman, Rm. 201, Whitla Bldg., 70 Arthur St., Tel. WHitehall 3-4933.

★ONTARIO, TORONTO 2B, Peter Fowler, Mgr.-Rep., 355 King St. West, Tel. Empire 6-2939.

★QUEBEC, MONTREAL 10, John Caschetto, Mgr.-Rep., 40 Moliere St., Tel. 276-2575.

FINEST QUALITY WORK ■ ■ HIGHEST PRODUCTION RATES ■ ■ LOWEST MAINTENANCE COSTS

Sales Agents For UNION SPECIAL Machines; Also Agent for (L) LEWIS and (C) COLUMBIA where marked.

AFRICA

(TEXTILE & BAG MAKING MACHINES) Berzack Bros., Ltd. REPUBLIC OF SOUTH AFRICA—JOHANNESBURG 135/7 Pritchard St. CAPETOWN—78 Darling St. DURBAN—72/74 Commercial Road. PORT ELIZABETH—277 Main Street. RHODESIA, BULAWAYO—133 Fife St. SALISBURY—102 Sinoa St. (L)

(BAG CLOSING MACHINES) South African Scale Co. Pty., Ltd. REPUBLIC OF SOUTH AFRICA—JOHANNESBURG—32 Von Brandis St. BLOMFONTEIN—53 Zastron St. CAPETOWN—Wales and Bree Sts. DURBAN—22 Aliwal St. EAST LONDON—38 Argyle St., LADYSMITH, Natal—355 Murchison. PORT ELIZABETH—Box 611. Also at PIETERMARITZBURG, PRETORIA, VEREENGING and WORCESTER. RHODESIA, BULAWAYO—2 Leander House, Rhodes Street. SALISBURY—95 Victoria Street, ZAMBIA—KITWE-Blantyre Road.

ALGERIA, ALGIERS—Etab. Sayag, 8 Rue Altairac.

ETHIOPIA, ASMARA—S.A. Calderani Africa, Avenue P. Asfaha Woosen (L & C)

IVORY COAST-ABIDJAN—Ets. Jean Abile-Gal, Box 1798. (L & C)

KENYA, NAIROBI—Transcandia, Ltd., College House, Koinange St. (P.O. Box 5933) (L & C) (Also Uganda, Tanganyika and Zanzibar)

MALAGASY REPUBLIC—TANANARIVE—Soc. Ind. Et Com. De L'Emyrne, Boite Postale 1078, 17 Rue Clemenceau (L & C)

MAURITIUS, PORT LOUIS—(Bag Closing & Bag Making Machines) Hall, Geneve, Langlois, Ltd., 42 Sir William Newton St.

MOROCCO, CASABLANCA—R. Geissmann & Fils, Rue El Idrissi Es Sakali (L)

NIGERIA, APAPA, LAGOS—Sunflag Knitting Mills (Nigeria) Ltd. 9 Warehouse Road. (L & C)

SUDAN, KHARTOUM—Franco Pinto (Sudan) Ltd., P.O. Box 305. (L & C)

TUNISIA, TUNIS—Comptoir Industrial & Menager, 8 Rue du 18 Janvier 1952 (L)

ASIA

CAMBODIA, PHOM-PENH—Denis Freres, 219 P.B. Sisowoth, P.O. Box 48. (C & L)

HONG KONG—G. R. Coleman Co. (Hong Kong) Ltd., Rm. 305, Wing Ting Building, 7-13 Wellington St.

INDIA, CALCUTTA—Parrot Sewing Machine (P.) Ltd. 9/1 Sovaram Bysack St. (L & C)

JAPAN, OSKA—Kondo Sewing Machine Co. 163. Umegoe-Cho Kita-ku. (L) Branch—Tokyo 6-3 Ginza, Choo-Ku. Also at: Ashikaga, Fukai, Nagoya, Niigata, and Okayama.

KOREA, SEOUL—Uebersee-Handel A.G., Rm. 604, Bando Bldg. 180 1-ka Ulchiro; Chung-Ku, Int. P.O. Box 1268. (L)

LAOS, VIETIANE—Denis Freres, P.O. Box 133. (C & L)

PAKISTAN, (WEST) KARACHI-2—Universal Trading Corp., 29 Zeenat Mansion, Mcleod Road. (EAST) (Bag closing and bag making machines) Thomas C. Keay, Ltd., 15 Baltic Street, Dundee, Scotland.

REPUBLIC OF CHINA, TAIWAN, TAIPEI—G. R. Coleman Co. (Taiwan) Ltd., 16 Nan Yang St. (L & C)

THAILAND, BANGKOK—Yip In Tsoi & Co., Ltd., P.O. Box 23. (L & C)

VIETNAM, SAIGON—S.A. Pour Le Riz et L'Indutri (Sarl) 147 Trinh Minn-The (B. P. 444) (C & L)

AUSTRALIA

SOLE DISTRIBUTORS: Capron, Carter Pty., Ltd., 86 Liverpool Street, SYDNEY. Branches at: BRISBANE—454 Brunswick St., Valley, N.1. MELBOURNE—154 A'Beckett St. AGENTS: SOUTH AUSTRALIA-ADELAIDE—William Charlick Ltd., London Road, Mile End. WESTERN AUSTRALIA PERTH—Thomsons Pty. Ltd., 789 Hay St. TASMANIA, LAUNCESTON-Sew Knit Pty. Ltd., 72-74 George St. (L & C)

EUROPE

AUSTRIA, VIENNA—Firma Naeschuster, Mariahilferstr. 51, (L)

BELGIUM, BRUSSELS—Union Special Machine Corporation of America, 90 Rue de la Caserne, Gustave Thierie, Mgr. (C)

DENMARK, COPENHAGEN—Rothenborg Specialmaskiner for Sy-Industrien A/S, Nikolaj Plads 23. Offices at: AALBORG, HERNING, KOLDING, ODENSE, RISSKOV-AARHUS AND SILKEBORG. (L & C)

FINLAND, HELSINKI-LAUTTASAARI—Suomen Konellike O/Y, Vattuniemenkatu 13. Branches at TAMPERE-Pientoollisuostalo. TURKU, Humalistonkatu 7-B. (L & C)

FRANCE, PARIS—Cie. des Machines Union Special de France, 91 Ave. de la Republique—Thos. de Semlyen, Directeur. Branch at: ROUBAIX (NORD)—50 Ave. J. Lebas. LYON, VILLEURBANNE (RHONE) 58 rue Alexandre Boutin. TOULOUSE (HAUTE GARONNE) 12, BD. Montplaisir.

GERMANY, STUTTGART—Union Special Maschinenfabrik, G.m.b.H., Schwabstr. 33—A. W. Krieger, Managing Director. Th. M. Baanstra, Director of Sales, BRANCHES AT: BERLIN, BIELEFELD, EBINGEN, FRANKFURT, HAMBURG, KOLN, MUNCHEN, OCHTRUP.

GREAT BRITAIN—(Textile Machinery)—ENGLAND—OADBY (NR. LEICESTER)—Union Special Machine Company, Ltd., Manderveil Road, Industrial Estate. Mr. A. B. Fitzpatrick, Manager. LONDON—108 City Road (H. O. Hall, Manager). SALES OFFICES: BRISTOL, L. J. Heard, 19 The Rides. Kingswood, SCOTLAND, MILNGAVIE (GLASGOW)—Derrick R. Robinson, 48 Clochbar Avenue. SUB-AGENTS: LONDON, W. 1—G. Johnson & Son (Sewing Machinery), Ltd., 58 Great Titchfield Street. MANCHESTER 19—S. A. Smith, (Manchester) Ltd., Park Grove Works, Levenshulme. NORTHERN IRELAND—BELFAST 15, Aktex Ltd. 186 Cavehill Road. SCOTLAND, GLASGOW S.E.—Allardice & Co., 9 Stevenson Street. (C) (Bag Closing and Bag Making Machines) SCOTLAND, DUNDEE—Thomas C. Keay, Ltd., 15 Baltic Street—Agent for entire British Isles.

GREECE, ATHENS—Georges Yannakouras-Dimoulis, 30 Petraki St. (L & C)

ICELAND, REYKJAUIK—Magnus Thorgeirsson, Skolavordustig 1a (L & C).

IRELAND, DUBLIN—(Textile Machines) W. Blythman, 224 Parnell Street (L & C) (Bag Closing and Bag Making Machines) Thomas C. Keay, Ltd., 15 Baltic St., Dundee, Scotland.

ITALY, MILANO—Giovanni Conti & Nipoti, Via Varese 18. (L & C)

MALTA, VALLETTA—A. C. Wismayer & Co., Ltd., 62 Old Bakery Street. (L & C)

THE NETHERLANDS, AMSTERDAM—N. V. Machinehandel C. & H. Verbeek, Kloveniersburgwal 77. Offices at: ARNHEM, ENSCHEDE, GRONINGEN, ROTTERDAM, SITTARD, TILBURG. (L & C)

NORWAY, MANGLERUD—Jac. Jacobsen A/S, Enebakkveien 117, BERGEN—Bjornsongst 24. (C)

PORTUGAL, OPORTO—Rost & Janus, Succs. Lda., Rua Barao de Forrester 914. (L)

SPAIN, BARCELONA—Rapida, S.A., Via Layetana 37 (L)

SWEDEN, BORAS—Rud. Nystrom & Co., A/B, Lilla Brannerigaten 6. Branches at OREBRO-Slojdgatan 37-39, MALMO, S. Forstandsgatan 16. Sub-Agent STOCKHOLM, A/B Forsberg & Kato, Tomtebogatan 38.

SWITZERLAND, URDORF (ZH)—Bourquin & Cie., Vogelaustr. (Postfach). (L-Button Sewer)

LATIN AMERICA

Union Special International, Inc.

ARGENTINA, BUENOS AIRES—IROMAC S.A.C., Division Pamaco Costura, S.A., San Jose 350. (Union Special Machine Company), (L & C)

BRAZIL, SAO PAULO—Pancostura S.A.—Industria e Comercio, Rua Aurora 59A-71. Branches at PORTO ALEGRE—Rua Voluntarios da Patria 533; RECIFE—Rua Princesa Isabel 105; RIO DE JANEIRO—Rua Alexandre MacKenzie 117. (C & L)

CHILE, SANTIAGO—Lowenstein & Stewart, S.A.C., Calle Santa Domingo 1140. (L & C)

COLOMBIA, BOGOTA—Macaizado, Ltda., Carrera 30 #12-99. Branches at BARRANQUILLA—Carrera 45-B #34-54. BUCARAMANGA—Calle 34 #17-45. CALI—Carrera 7 #13-33/35. MANIZALES—E. Breslauer, Carrera 22 #18.44. MEDELLIN—Carrera 51, 36-18. PERELRA—Cra. 8—#22-77. (L & C)

COSTA RICA, SAN JOSE—Enrique Rodrigues S., P.O. Box 1949. (L & C)

DOMINICAN REPUBLIC, SANTA DOMINGO—Roberto Dominquez, G., Calle Dr. Pedro Urena 19. (L & C)

ECUADOR, GUAYAQUIL—Distribuidora Richard O. Custer, S.A., Malecon Simon Bolivar #2308. Branch at QUITO—Avenida Patria 768. (L & C)

EL SALVADOR, SAN SALVADOR—Vaira Hermanos, Colonia Vaira. (L)

GUATEMALA, GUATEMALA—Compania Agro Comercial, S.A., 8a Avenida Sur Zona 1. (L & C)

HONDURAS, SAN PEDRO SULA—Jacobo E. Handel, P.O. Box 559 (L & C)

MEXICO, MONTERREY, N.L.—Talleres Perez Zozaya, S.A. de C.V., Cuauhtemoc Norte 335. Branches at: GUADALAJARA, JAL.—Hidalgo 45 y 47; MEXICO, D.F.—Distribuidora Union Especial, S.A. de C.V., Ave., Pino Suarez 99-a (Apartado 28070); SAN LUIS POTOSI, S.L.P.—J. de los Reyes 80. (L)

NICARAGUA, MANAGUA—Casa Hentgen, 3A Calle N.O. #303. (L)

PANAMA, PANAMA—Agencias Hagus, S.A., Ave. 7A Espana #45.

PERU, LIMA, Breña—United Agencies, S.A. (Peru) Av. Alfonso Ugarte 1445-1447. (L & C)

PUERTO RICO, SAN JUAN—Abarca Warehouse Corp., P.O. Box 2352. (L & C)

SURINAM, PARAMARIBO—Kirpalani's, Ltd., 17-27 Maagden St. (L & C)

URUGUAY, MONTEVIDEO—Storer & Cia., S.A., Uruguaya, Mercedes 1312. (L)

VENEZUELA, CARACAS—H. Blohm, S.A., Dr. Paul A. Chorro 29.

NEAR EAST

CYPRUS, NICOSIA—Christodoulides Bros. & Co., 94 Tricoupis St. (L)

IRAN, TEHERAN—Sava Trading Corp., Ave. Bozarjomehri 881. Seray Saadiyeh. (L & C)

IRAQ, BAGHDAD—Sons of O. O. Agopian (IRAQ), P.O. Box 2021, Alwiyah. (L & C)

ISREAL, TEL AVIV—L. Taube, Ltd., 15 Lilienblom St. (L)

JORDAN—Bandar & Aractingi, B.P. 1144—Damas, Syria (L & C)

LEBANON, BEIRUT—Sons of O. O. Agopian, P.O. 1165. (L & C)

SYRIA, DAMAS—Bandar & Aractingi, B.P. 1144. (L & C)

TURKEY, ISTANBUL—M. Benmayor, Mahmutpasa Abut Efendi Han Nr. 46-47. (L & C)

U.A.R., Cairo—Misr Import & Export Co., 6 Rue Adly—Tech. Sub-Agent—A. Kavaldilen S.A.R.L., 200 Sharia Shubra (L & C)

NEW ZEALAND

SOLE DISTRIBUTOR: H. A. Tuck & Co., Ltd., 171 Albert St. AUCKLAND. BRANCH AT: WELLINGTON, Lees Bldg., Nelson St. (L) Also—New Caledonia, Cook Islands, Ellice Islands, Gilbert Islands, New Hebrides, Samoa (American), Tahiti, and Tonga. SUB-AGENTS: Glendermid, Ltd., CHRISTCHURCH—90 Orbell St. DUNEDIN—192-196 Castle St., P.O. Box 40. (C) FIJI SUVA—Karl R. Fleischman, P.O. Box 602. (L) SAMOA (WESTERN), APIA—S. C. Percival, P.O. Box 204. (L)

PACIFIC ISLANDS

HAWAII, HONOLULU—(Textile Machines) Territorial Sales Co., 508 Atkinson Drive. (L). (Bag Closing and Bag Making Machines) H. S. Gray Co., 759 Puuloa Rd.

PHILIPPINE ISLANDS, MAKATI, RIZAL—Atkins, Kroll & Co., Inc., 313 Malugay Street, (Buendia Extension). Branch at CEBU. (L & C)

WEST INDIES FEDERATION, JAMAICA

Union Special International, Inc.

JAMAICA, KINGSTON—Morris E. Parkin, 96 King St. (L)

TRINIDAD, PORT OF SPAIN—Ackrill & Co., 17 Henry St. (L & C) Also—BARBADOS, GRENADA, TOBAGO.

Additional Sales Agents for (L) LEWIS and (C) COLUMBIA Machines

1-66

AUSTRIA IV, VIENNA—Franz Koerpert & Sohne, K.G., Wiedner Hauptstrasse 36. (C)

BELGIUM, BRUSSELS—N. V. Machinehandel C & H Verbeek, Kruidtuinlaan 57a, Buyl Bldg. (L)

FRANCE, PARIS—Societe G. Arnon & Cie., 14 Rue Commines (L)—Aspe-Dumont & Cie., 13 Rue de la Fontaine-Au-Roi. (C)

GERMANY, KREFELD—Herbert Jannsen, Alte Linnerstr. 104 (C. lie mach.)

GREAT BRITAIN—ENGLAND, LONDON, E.C.2—Eastman Machine Company, Ltd., 128-132 Curtain Road. CROYDON, 89 Beddington Lane. LEEDS—60 Merrion Street. MANCHESTER, 105-107A Corporation Street. SCOTLAND, GLASGOW S2—11 Drumreach Place, Toryglen. NORTHERN IRELAND, BELFAST 14—W. F. Marwell, 50 Glenbryn Park. REPUBLIC OF IRELAND, DUBLIN—Wm. Blythman, Ltd., 223/4 Parnell Street. (L)

ISRAEL, TEL AVIV—Israel Sewing Machine Co., 22 Yehudo Halevy St. (C)

MEXICO, MEXICO, D.F.—Casa Diaz de Maquinas de Caser, Av. Republic Del Salvador 89-93 (C)

MOROCCO, CASABLANCA—Durkopp Coudrex, 25 Rue Bascunana. (C)

NORWAY, OSLO—J. A. Johansen A/S, Torvgatan 10. (L)

REPUBLIC OF SOUTH AFRICA, JOHANNESBURG—African Sewing Machine Company (Pty.) Ltd., 118 President Street. Branches at: CAPE TOWN—110 Plein St.; DURBAN—9 Niew Miester Lane (C)

RHODESIA, FEDERATION OF RHODESIA & NYASALAND, BULAWAYO—African Sewing Machine Company (Rhodesia) (Pvt.) Ltd., 2 Leonidas House, 138 Rhodes Ave.

SPAIN, BARCELONA—Arbis S/A, Gerona 63. (C)

SWEDEN, BORAS—Husqvarna, Industrisymaskiner A/B—Katrinedalsgatan 13. Branches: GOTEBORG—Stigbergsliden 1 MALMO—Isak Slaktaregatan 9—OREBRO—Storfoget 19—STOCKHOLM—Brunnsgatan 6-8. Agents—ULRICEHAM—Firma Hjalmar Svensson, Tingshusgatanz. (C)

SWEDEN, BORAS—A/B, A. C. Gustafson, Skolgatan 30, Branches: MALMO—Sevedsgatan 14. STOCKHOLM—Kungsgatan 18 Ulricehom-Holdgatan 20. Sub-Agent—GOTEBORG—Symaskinsverkstaden special, Kungsholsgatan 7. (L)

SWITZERLAND, ZURICH—Fritz Zellweger & Sohne, Seinaustr. 27. (L. except Button Sewer) Guttinger A.G., Sihlstrasse 37. (C)

URUGUAY, MONTEVIDEO—C. Brandes & Cia., S.A., Calle Rincon 658-60. (C)

INDUSTRIAL SEWING MACHINES

. . . for Every Purpose!

Job requirements vary — that's why Union Special builds a wide variety of specially designed sewing machines. It is also the reason why Union Special field representatives make a careful study of requirements before giving you detailed recommendations on the kind of equipment to install. Plants equipped with modern, high speed Union Specials have an important advantage. Union Special machines are built to do the job faster . . . better . . . cheaper, and they stay on the job with minimum time out for repairs. You're ahead when you use Union Special.

50000 SERIES MACHINES

The thousands of manufacturers using Union Special's new 50000 SERIES machines are finding these ultra-modern, streamlined models to be invaluable aids in cutting costs of operations and boosting production of a wide variety of products. Each of the many machines in the improved 50000 SERIES is specially designed to do a specific job efficiently, quickly, and economically!

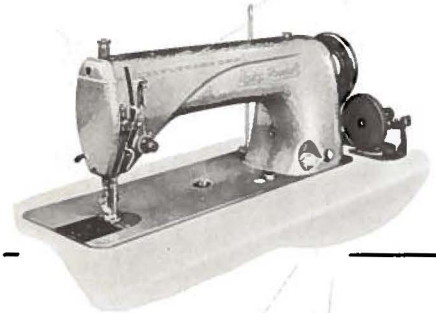

THE 61400 LOCKSTITCH

Never before has a general purpose Lockstitch machine been so thoroughly engineered for handling modern industrial sewing requirements! And never has a machine offered more than the new Union Special SIXTY-ONE-FOUR — a superior machine for light or heavy weight work . . . for short runs as well as long . . . for tacking and back stitching . . . for curved seams and straight runs.

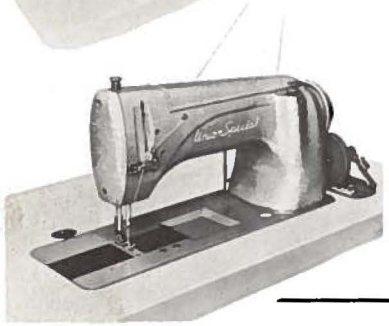

NEEDLE FEED LOCKSTITCH MACHINES

Latest improvements in engineering, manufacturing methods, and materials have been combined in Union Special Class 61800 and Class 62200 needle feed Lockstitch machines providing operators with smooth, streamlined, light-running machines that reduce fatigue and strain. It's no wonder that manufacturers in plants throughout the country are praising the superior performance of these ultra-modern machines!

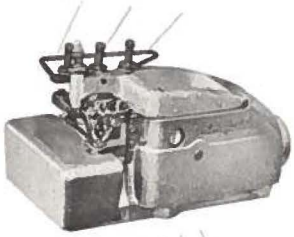

THE NEW CLASS 39500 OVEREDGER

This new development antiquates every machine presently on the market for use where a curved needle machine is recommended. From its handsome, dynamically functional, modern design to its innermost mechanism, the THIRTY-NINE-FIVE has been produced to accelerate quicker . . . run faster . . . operate more smoothly and quietly . . . with less maintenance . . . and yield a greater profit than any other like equipment available to users today.

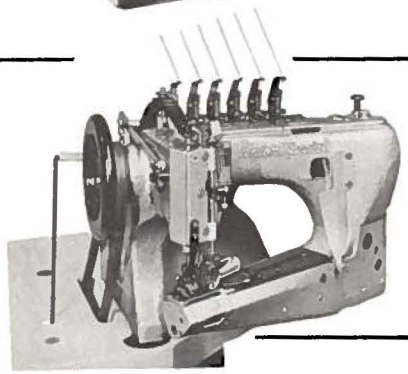

35700-35800 FEED-OFF-THE-ARM MACHINES

Union Special's popular feed-off-the-arm felling machines are light running, smooth operating machines that offer great advantages: sewing head of the latest type, new presser bar which practically eliminates feed marking, and presser foot which will lift at the lightest touch. Faster felling is certain with Union Special Class 35700-35800 feed-off-the-arm machines.